SECTION ATC
AUTOMATIC AIR CONDITIONER

CONTENTS

PRECAUTIONS 4
Precautions for Supplemental Restraint System (SRS) “AIR BAG” and “SEAT BELT PRE-TENSIONER” 4
Precautions for Working with HFC-134a (R-134a) 4
CONTAMINATED REFRIGERANT 5
General Refrigerant Precautions 5
Lubricant Precautions 5
Precautions for Refrigerant Connection 6
FEATURES OF NEW TYPE REFRIGERANT CONNECTION 6
O-RING AND REFRIGERANT CONNECTION..... 7
Precautions for Servicing Compressor 9
Precautions for Service Equipment 9
RECOVERY/RECYCLING EQUIPMENT 9
ELECTRONIC LEAK DETECTOR 9
VACUUM PUMP 9
MANIFOLD GAUGE SET 9
SERVICE HOSES 10
SERVICE COUPLERS 10
REFRIGERANT WEIGHT SCALE 10
CHARGING CYLINDER 10
Precautions for Leak Detection Dye 10
IDENTIFICATION 11
IDENTIFICATION LABEL FOR VEHICLE 11
PREPARATION 12
Special Service Tools 12
HFC-134a (R-134a) Service Tools and Equipment .. 13
Commercial Service Tools 15
REFRIGERATION SYSTEM 16
Refrigerant Cycle 16
REFRIGERANT FLOW 16
FREEZE PROTECTION 16
Refrigerant System Protection 16
REFRIGERANT PRESSURE SENSOR 16
PRESSURE RELIEF VALVE 16
V-6 Variable Displacement Compressor 17
GENERAL INFORMATION 17
DESCRIPTION 18
Component Layout 21
LUBRICANT 22
Maintenance of Lubricant Quantity in Compressor .. 22
LUBRICANT 22
LUBRICANT RETURN OPERATION 22
LUBRICANT ADJUSTING PROCEDURE FOR COMPONENTS REPLACEMENT EXCEPT COMPRESSOR 23
LUBRICANT ADJUSTING PROCEDURE FOR COMPRESSOR REPLACEMENT 23
AIR CONDITIONER CONTROL 25
Description of Air Conditioner LAN Control System .. 25
System Construction 25
OPERATION 25
TRANSMISSION DATA AND TRANSMISSION ORDER 26
AIR MIX DOOR CONTROL (AUTOMATIC TEMPERATURE CONTROL) 27
FAN SPEED CONTROL 27
INTAKE DOOR CONTROL 27
OUTLET DOOR CONTROL 27
MAGNET CLUTCH CONTROL 27
SELF-DIAGNOSIS SYSTEM 27
Description of Control System 28
Control Operation 29
MODE CONTROL DIAL 29
TEMPERATURE CONTROL DIAL (POTENTIO TEMPERATURE CONTROL) 29
FAN CONTROL DIAL 29
REAR WINDOW DEFOGGER SWITCH 29
INTAKE SWITCH 29
A/C SWITCH 29
Discharge Air Flow 30
System Description 31
SWITCHES AND THEIR CONTROL FUNCTION .. 31
TROUBLE DIAGNOSIS 32
How to Perform Trouble Diagnoses for Quick and Accurate Repair 32
WORK FLOW 32
SYMPTOM TABLE 32
Component Parts and Harness Connector Location .. 33

ENGINE COMPARTMENT 33
PASSENGER COMPARTMENT 34
Schematic — A/C, A — 35
Wiring Diagram — A/C, A — 36
Auto Amp. Terminals and Reference Value 40
PIN CONNECTOR TERMINAL LAYOUT 40
TERMINALS AND REFERENCE VALUE FOR AUTO AMP. 40
Self-diagnosis Function 42
DESCRIPTION 42
FUNCTION CONFIRMATION PROCEDURE 44
AUXILIARY MECHANISM: TEMPERATURE SETTING TRIMMER 48
AUXILIARY MECHANISM: FOOT POSITION SETTING TRIMMER 49
AUXILIARY MECHANISM: INLET PORT MEMORY FUNCTION 49
Operational Check 50
CHECKING BLOWER 50
CHECKING DISCHARGE AIR 50
CHECKING INTAKE AIR 50
CHECKING TEMPERATURE DECREASE 50
CHECKING TEMPERATURE INCREASE 50
CHECKING A/C SWITCH 50
Power Supply and Ground Circuit for Auto Amp. ... 51
INSPECTION FLOW 51
COMPONENT DESCRIPTION 51
DIAGNOSIS PROCEDURE FOR A/C SYSTEM.. 52
LAN System Circuit 53
DIAGNOSIS PROCEDURE FOR LAN CIRCUIT... 53
Mode Door Motor Circuit 56
INSPECTION FLOW 56
SYSTEM DESCRIPTION 57
COMPONENT DESCRIPTION 58
DIAGNOSIS PROCEDURE FOR MODE DOOR MOTOR 58
Air Mix Door Motor Circuit 59
INSPECTION FLOW 59
SYSTEM DESCRIPTION 60
COMPONENT DESCRIPTION 61
DIAGNOSIS PROCEDURE FOR AIR MIX DOOR MOTOR 61
Air Mix Door Motor PBR Circuit 61
DIAGNOSIS PROCEDURE FOR AIR MIX DOOR MOTOR PBR 61
Intake Door Motor Circuit 62
INSPECTION FLOW 62
SYSTEM DESCRIPTION 63
COMPONENT DESCRIPTION 64
DIAGNOSIS PROCEDURE FOR INTAKE DOOR MOTOR 64
Blower Motor Circuit 65
INSPECTION FLOW 65
SYSTEM DESCRIPTION 66
COMPONENT DESCRIPTION 67
DIAGNOSIS PROCEDURE FOR BLOWER MOTOR 67
COMPONENT INSPECTION 70
Magnet Clutch Circuit 71
INSPECTION FLOW 71
SYSTEM DESCRIPTION 72
DIAGNOSIS PROCEDURE FOR MAGNET CLUTCH 72
COMPONENT INSPECTION 76
Insufficient Cooling 77
INSPECTION FLOW 77
PERFORMANCE TEST DIAGNOSIS 79
PERFORMANCE CHART 81
TROUBLE DIAGNOSIS FOR UNUSUAL PRESSURE 82
Insufficient Heating 85
INSPECTION FLOW 85
Noise 86
INSPECTION FLOW 86
Self-diagnosis 87
INSPECTION FLOW 87
Ambient Sensor Circuit 88
COMPONENT DESCRIPTION 88
AMBIENT TEMPERATURE INPUT PROCESS... 88
DIAGNOSIS PROCEDURE FOR AMBIENT SENSOR 88
COMPONENT INSPECTION 90
In-vehicle Sensor Circuit 90
COMPONENT DESCRIPTION 90
DIAGNOSIS PROCEDURE FOR IN-VEHICLE SENSOR 91
COMPONENT INSPECTION 92
Sunload Sensor Circuit 93
COMPONENT DESCRIPTION 93
SUNLOAD INPUT PROCESS 93
DIAGNOSIS PROCEDURE FOR SUNLOAD SENSOR 93
COMPONENT INSPECTION 95
Intake Sensor Circuit 96
COMPONENT DESCRIPTION 96
DIAGNOSIS PROCEDURE FOR INTAKE SENSOR 96
COMPONENT INSPECTION 97
CONTROLLER 98
Removal and Installation 98
REMOVAL 98
INSTALLATION 98
AMBIENT SENSOR 99
Removal and Installation 99
REMOVAL 99
INSTALLATION 99
IN-VEHICLE SENSOR 100
Removal and Installation 100
REMOVAL 100
INSTALLATION 100
SUNLOAD SENSOR 101
Removal and Installation 101
REMOVAL 101
INSTALLATION 101
INTAKE SENSOR 102
Removal and Installation 102
REMOVAL 102
INSTALLATION 102

BLOWER UNIT **103**
Removal and Installation 103
REMOVAL 103
INSTALLATION 103
Disassembly and Assembly 104
BLOWER MOTOR **105**
Removal and Installation 105
REMOVAL 105
INSTALLATION 105
INTAKE DOOR MOTOR **106**
Removal and Installation 106
REMOVAL 106
INSTALLATION 106
FAN CONTROL AMPLIFIER **107**
Removal and Installation 107
REMOVAL 107
INSTALLATION 107
IN-CABIN MICROFILTER **108**
Removal and Installation 108
FUNCTION 108
REPLACEMENT TIMING 108
REPLACEMENT PROCEDURES 108
HEATER & COOLING UNIT ASSEMBLY **109**
Removal and Installation 109
REMOVAL 109
INSTALLATION 110
Disassembly and Assembly 111
MODE DOOR MOTOR **112**
Removal and Installation 112
REMOVAL 112
INSTALLATION 112
AIR MIX DOOR MOTOR **113**
Removal and Installation 113
REMOVAL 113
INSTALLATION 113
HEATER CORE **114**
Removal and Installation 114
REMOVAL 114
INSTALLATION 114
DUCTS AND GRILLES **115**
Removal and Installation 115
REMOVAL 115
INSTALLATION 118
REFRIGERANT LINES **119**
HFC-134a (R-134a) Service Procedure 119
SETTING OF SERVICE TOOLS AND EQUIP-MENT 119
Components 121
Removal and Installation of Compressor 121
REMOVAL 121
INSTALLATION 122
Removal and Installation of Compressor Clutch . 123
REMOVAL 123
INSTALLATION 125
Removal and Installation of Low-Pressure Flexible Hose 126
REMOVAL 126
INSTALLATION 126
Removal and Installation of High-Pressure Flexible Hose 127
REMOVAL 127
INSTALLATION 127
Removal and Installation of High-Pressure Pipe . 127
REMOVAL 127
INSTALLATION 128
Removal and Installation of Condenser 128
REMOVAL 128
INSTALLATION 129
Removal and Installation of Liquid Tank 129
REMOVAL 129
INSTALLATION 129
Removal and Installation of Refrigerant Pressure Sensor 130
REMOVAL 130
INSTALLATION 130
Removal and Installation of Evaporator 130
REMOVAL 130
INSTALLATION 131
Removal and Installation of Expansion Valve 131
REMOVAL 131
INSTALLATION 131
Checking for Refrigerant Leaks 132
Checking System for Leaks Using the Fluorescent Leak Detector 132
Dye Injection 132
Electronic Refrigerant Leak Detector 133
PRECAUTIONS FOR HANDLING LEAK DETECTOR 133
CHECKING PROCEDURE 134
SERVICE DATA AND SPECIFICATIONS (SDS) ... **136**
Compressor 136
Lubricant 136
Refrigerant 136
Engine Idling Speed 136
Belt Tension 136

PRECAUTIONS

PFP:00001

Precautions for Supplemental Restraint System (SRS) “AIR BAG” and “SEAT BELT PRE-TENSIONER”

AJS001OL

The Supplemental Restraint System such as “AIR BAG” and “SEAT BELT PRE-TENSIONER”, used along with a front seat belt, helps to reduce the risk or severity of injury to the driver and front passenger for certain types of collision. Information necessary to service the system safely is included in the SRS and SB section of this Service Manual.

WARNING:

- **To avoid rendering the SRS inoperative, which could increase the risk of personal injury or death in the event of a collision which would result in air bag inflation, all maintenance must be performed by an authorized NISSAN/INFINITI dealer.**
- **Improper maintenance, including incorrect removal and installation of the SRS, can lead to personal injury caused by unintentional activation of the system. For removal of Spiral Cable and Air Bag Module, see the SRS section.**
- **Do not use electrical test equipment on any circuit related to the SRS unless instructed to in this Service Manual. SRS wiring harnesses can be identified by yellow and/or orange harnesses or harness connectors.**

Precautions for Working with HFC-134a (R-134a)

AJS001OI

WARNING:

- **CFC-12 (R-12) refrigerant and HFC-134a (R-134a) refrigerant are not compatible. If the refrigerants are mixed and compressor malfunction is likely to occur, refer to “CONTAMINATED REFRIGERANT” below. To determine the purity of HFC-134a (R-134a) in the vehicle and recovery tank, use Refrigerant Recovery/Recycling Recharging equipment and Refrigerant identifier.**
- **Use only specified lubricant for the HFC-134a (R-134a) A/C system and HFC-134a (R-134a) components. If lubricant other than that specified is used, compressor malfunction is likely to occur.**
- **The specified HFC-134a (R-134a) lubricant rapidly absorbs moisture from the atmosphere. The following handling precautions must be observed:**

– **When removing refrigerant components from a vehicle, immediately cap (seal) the component to minimize the entry of moisture from the atmosphere.**

– **When installing refrigerant components to a vehicle, do not remove the caps (unseal) until just before connecting the components. Connect all refrigerant loop components as quickly as possible to minimize the entry of moisture into system.**

– **Only use the specified lubricant from a sealed container. Immediately reseal containers of lubricant. Without proper sealing, lubricant will become moisture saturated and should not be used.**

– **Avoid breathing A/C refrigerant and lubricant vapor or mist. Exposure may irritate eyes, nose and throat. Remove HFC-134a (R-134a) from the A/C system, using certified service equipment meeting requirements of SAE J-2210 [HFC-134a (R-134a) recycling equipment], or J-2209 [HFC-134a (R-134a) recovery equipment]. If accidental system discharge occurs, ventilate work area before resuming service. Additional health and safety information may be obtained from refrigerant and lubricant manufacturers.**

– **Do not allow lubricant (Nissan A/C System Oil Type S) to come in contact with styrofoam parts. Damage may result.**

CONTAMINATED REFRIGERANT

If a refrigerant other than pure HFC-134a (R-134a) is identified in a vehicle, your options are:

- Explain to the customer that environmental regulations prohibit the release of contaminated refrigerant into the atmosphere.
- Explain that recovery of the contaminated refrigerant could damage your service equipment and refrigerant supply.
- Suggest the customer return the vehicle to the location of previous service where the contamination may have occurred.
- If you choose to perform the repair, recover the refrigerant using only **dedicated equipment and containers. Do not recover contaminated refrigerant into your existing service equipment.** If your facility does not have dedicated recovery equipment, you may contact a local refrigerant product retailer for available service. This refrigerant must be disposed of in accordance with all federal and local regulations. In addition, replacement of all refrigerant system components on the vehicle is recommended.
- If the vehicle is within the warranty period, the air conditioner warranty is void. Please contact Nissan Customer Affairs for further assistance.

General Refrigerant Precautions

AJS001JW

WARNING:

- **Do not release refrigerant into the air. Use approved recovery/recycling equipment to capture the refrigerant every time an air conditioning system is discharged.**
- **Always wear eye and hand protection (goggles and gloves) when working with any refrigerant or air conditioning system.**
- **Do not store or heat refrigerant containers above 52°C (125°F).**
- **Do not heat a refrigerant container with an open flame; if container warming is required, place the bottom of the container in a warm pail of water.**
- **Do not intentionally drop, puncture, or incinerate refrigerant containers.**
- **Keep refrigerant away from open flames: poisonous gas will be produced if refrigerant burns.**
- **Refrigerant will displace oxygen, therefore be certain to work in well ventilated areas to prevent suffocation.**
- **Do not pressure test or leak test HFC-134a (R-134a) service equipment and/or vehicle air conditioning systems with compressed air during repair. Some mixtures of air and HFC-134a (R-134a) have been shown to be combustible at elevated pressures. These mixtures, if ignited, may cause injury or property damage. Additional health and safety information may be obtained from refrigerant manufacturers.**

Lubricant Precautions

AJS001JX

- Use only specified lubricant for the HFC-134a (R-134a) A/C system and HFC-134a (R-134a) components. If lubricant other than that specified is used, compressor malfunction is likely to occur.
- The specified HFC-134a (R-134a) lubricant rapidly absorbs moisture from the atmosphere. The following handling precautions must be observed:
  - When removing refrigerant components from a vehicle, immediately cap (seal) the component to minimize the entry of moisture from the atmosphere.
  - When installing refrigerant components to a vehicle, do not remove the caps (unseal) until just before connecting the components. Connect all refrigerant loop components as quickly as possible to minimize the entry of moisture into system.
  - Only use the specified lubricant from a sealed container. Immediately reseal containers of lubricant. Without proper sealing, lubricant will become moisture saturated and should not be used.
- Avoid breathing A/C refrigerant and lubricant vapor or mist. Exposure may irritate eyes, nose and throat. Remove HFC-134a (R-134a) from the A/C system, using certified service equipment meeting requirements of SAE J-2210 [HFC-134a (R-134a) recycling equipment], or J-2209 [HFC-134a (R-134a) recovery equipment]. If accidental system discharge occurs, ventilate work area before resuming service. Additional health and safety information may be obtained from refrigerant and lubricant manufacturers.
- Do not allow lubricant (Nissan A/C System Oil Type S) to come in contact with styrofoam parts. Damage may result.

Precautions for Refrigerant Connection

AJS001JY

A new type refrigerant connection has been introduced to all refrigerant lines except the following location.

- Expansion valve to cooling unit
- Refrigerant pressure sensor to liquid tank

FEATURES OF NEW TYPE REFRIGERANT CONNECTION

- The O-ring has been relocated. It has also been provided with a groove for proper installation. This eliminates the chance of the O-ring being caught in, or damaged by, the mating part. The sealing direction of the O-ring is now set vertically in relation to the contacting surface of the mating part to improve sealing characteristics.
- The reaction force of the O-ring will not occur in the direction that causes the joint to pull out, thereby facilitating piping connections.

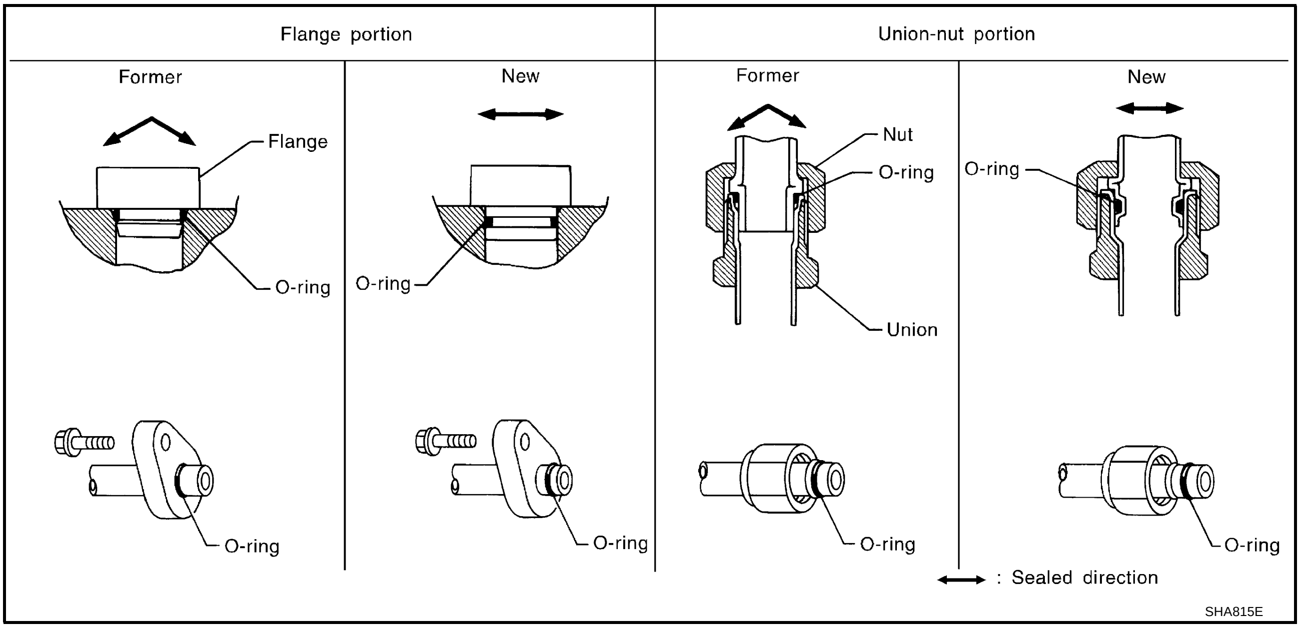

O-RING AND REFRIGERANT CONNECTION

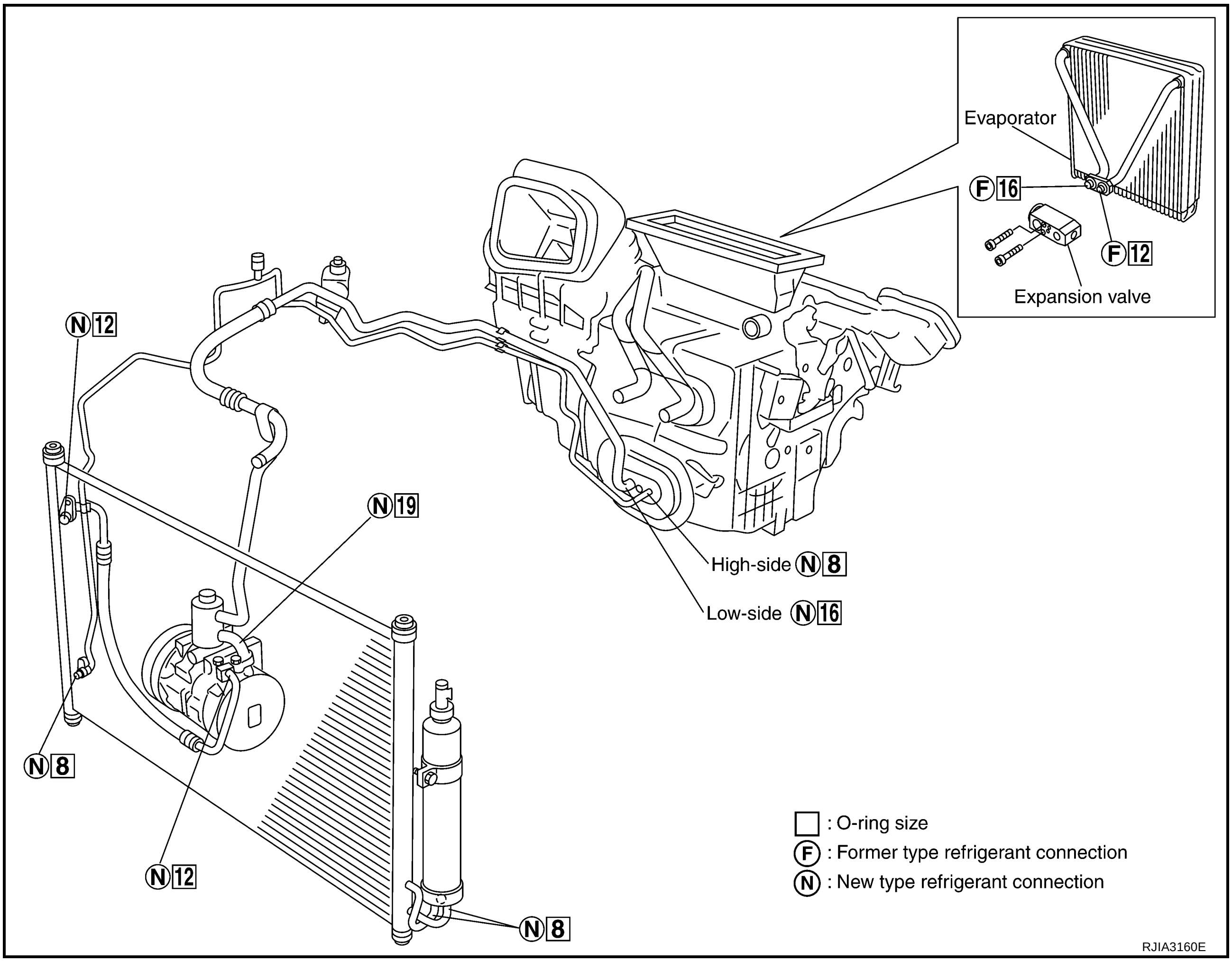

CAUTION:

The new and former refrigerant connections use different O-ring configurations. Do not confuse O-rings since they are not interchangeable. If a wrong O-ring is installed, refrigerant will leak at, or around, the connection.

O-Ring Part Numbers and Specifications

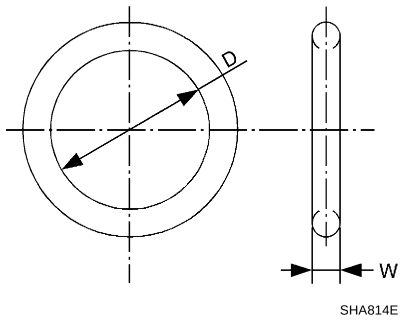

Connection type	O-ring size	Part number	D mm (in)	W mm (in)
New	8	92471 N8210	6.80 (0.2680)	1.85 (0.0728)
Former		92470 N8200	6.07 (0.2390)	1.78 (0.0701)
Former	10	J2476 89956	9.25 (0.3642)	1.78 (0.0701)
New	12	92472 N8210	10.90 (0.429)	2.43 (0.0957)
Former		92475 71L00	11.00 (0.433)	2.40 (0.0940)
New	16	92473 N8210	13.60 (0.535)	2.43 (0.0957)
Former		92475 72L00	14.30 (0.563)	2.30 (0.0910)
New	19	92474 N8210	16.50 (0.650)	2.43 (0.0957)
Former		92477 N8200	17.12 (0.674)	1.78 (0.0701)

WARNING:

Make sure all refrigerant is discharged into the recycling equipment and the pressure in the system is less than atmospheric pressure. Then gradually loosen the discharge side hose fitting and remove it.

CAUTION:

When replacing or cleaning refrigerant cycle components, observe the following.

- **When the compressor is removed, store it in the same way as it is when mounted on the car. Failure to do so will cause lubricant to enter the low-pressure chamber.**
- **When connecting tubes, always use a torque wrench and a back-up wrench.**
- **After disconnecting tubes, immediately plug all openings to prevent entry of dirt and moisture.**
- **When installing an air conditioner in the vehicle, connect the pipes at the final stage of the operation. Never remove the seal caps of pipes and other components until just before required for connection.**
- **Allow components stored in cool areas to warm to working area temperature before removing seal caps. This prevents condensation from forming inside A/C components.**
- **Thoroughly remove moisture from the refrigeration system before charging the refrigerant.**
- **Always replace used O-rings.**
- **When connecting tube, apply lubricant to circle of the O-rings shown in illustration. Be careful not to apply lubricant to threaded portion.**

  Lubricant name : Nissan A/C System Oil Type S
  Part number : KLH00-PAGS0

- **O-ring must be closely attached to dented portion of tube.**
- **When replacing the O-ring, be careful not to damage O-ring and tube.**
- **Connect tube until you hear it click, then tighten the nut or bolt by hand until snug. Make sure that the O-ring is installed to tube correctly.**
- **After connecting line, perform leak test and make sure that there is no leakage from connections. When the refrigerant leaking point is found, disconnect that line and replace the O-ring. Then tighten connections of seal seat to the specified torque.**

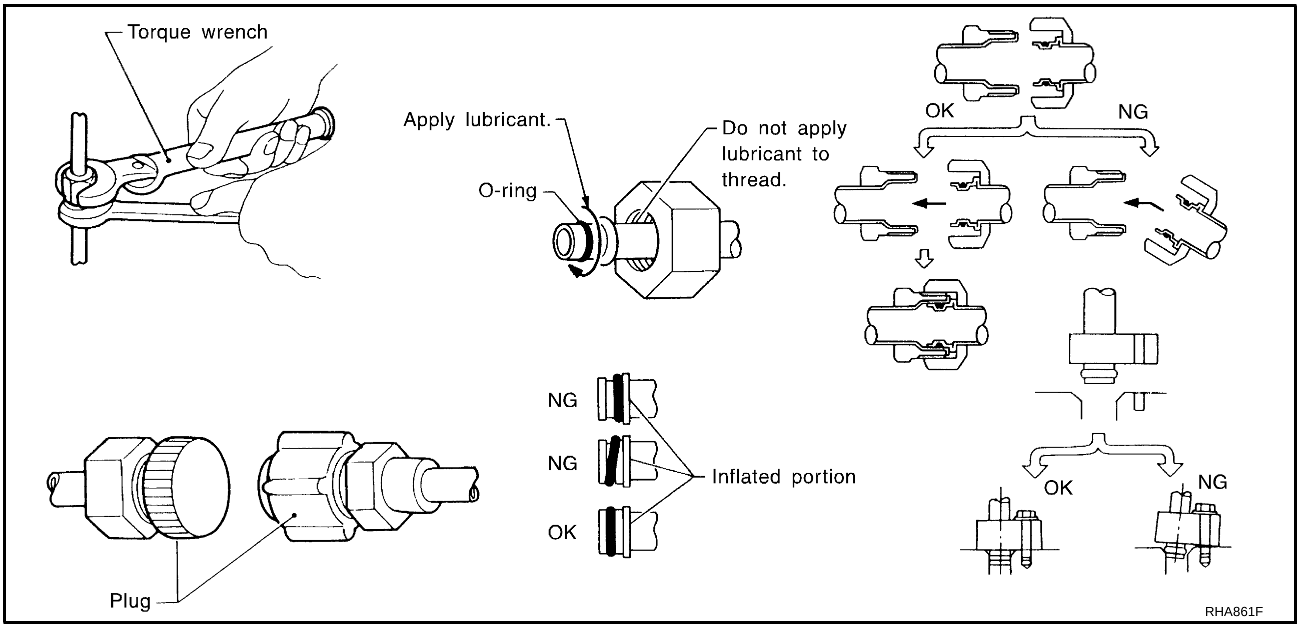

Precautions for Servicing Compressor

AJS001JZ

- **Plug all openings to prevent moisture and foreign matter from entering.**
- **When the compressor is removed, store it in the same position as it is when mounted on the car.**
- **When replacing or repairing compressor, follow “Maintenance of Lubricant Quantity in Compressor” exactly. Refer to ATC-22, "Maintenance of Lubricant Quantity in Compressor" .**
- **Keep friction surfaces between clutch and pulley clean. If the surface is contaminated, with lubricant, wipe it off by using a clean waste cloth moistened with thinner.**
- **After compressor service operation, turn the compressor shaft by hand more than five turns in both directions. This will equally distribute lubricant inside the compressor. After the compressor is installed, let the engine idle and operate the compressor for one hour.**
- **After replacing the compressor magnet clutch, apply voltage to the new one and check for normal operation.**

Precautions for Service Equipment

AJS001K0

RECOVERY/RECYCLING EQUIPMENT

Be certain to follow the manufacturer’s instructions for machine operation and machine maintenance. Never introduce any refrigerant other than that specified into the machine.

ELECTRONIC LEAK DETECTOR

Be certain to follow the manufacturer’s instructions for tester operation and tester maintenance.

VACUUM PUMP

The lubricant contained inside the vacuum pump is not compatible with the specified lubricant for HFC-134a (R-134a) A/C systems. The vent side of the vacuum pump is exposed to atmospheric pressure. So the vacuum pump lubricant may migrate out of the pump into the service hose. This is possible when the pump is switched off after evacuation (vacuuming) and hose is connected to it.
To prevent this migration, use a manual valve placed near the hose-to-pump connection, as follows.

- Usually vacuum pumps have a manual isolator valve as part of the pump. Close this valve to isolate the service hose from the pump.
- For pumps without an isolator, use a hose equipped with a manual shut-off valve near the pump end. Close the valve to isolate the hose from the pump.
- If the hose has an automatic shut-off valve, disconnect the hose from the pump. As long as the hose is connected, the valve is open and lubricating oil may migrate.

Some one-way valves open when vacuum is applied and close under no vacuum condition. Such valves may restrict the pump’s ability to pull a deep vacuum and are not recommended.

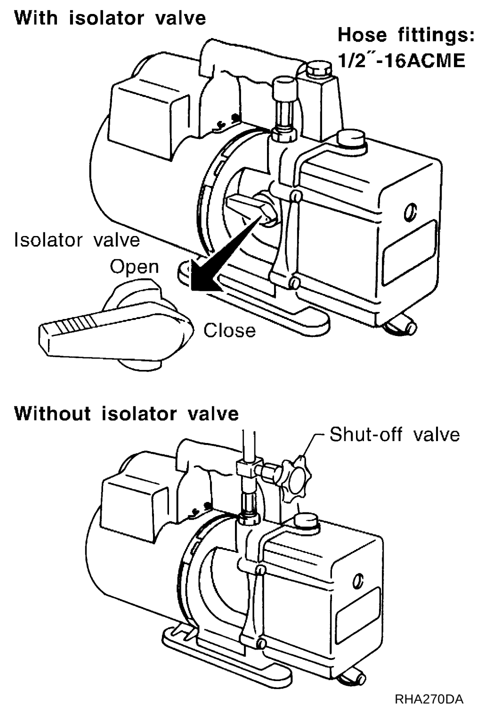

RHA270DA

MANIFOLD GAUGE SET

Be certain that the gauge face indicates HFC-134a or R-134a. Be sure the gauge set has 1/2″-16 ACME threaded connections for service hoses. Confirm the set has been used only with refrigerant HFC-134a (R-134a) and specified lubricants.

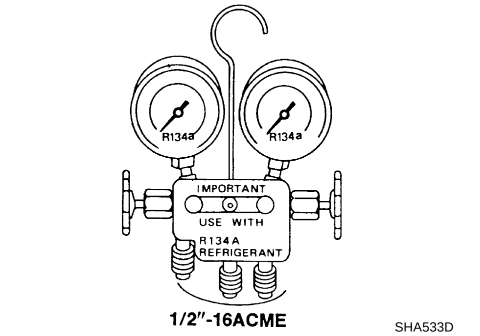

SHA533D

SERVICE HOSES

Be certain that the service hoses display the markings described (colored hose with black stripe). All hoses must include positive shut-off devices (either manual or automatic) near the end of the hoses opposite the manifold gauge.

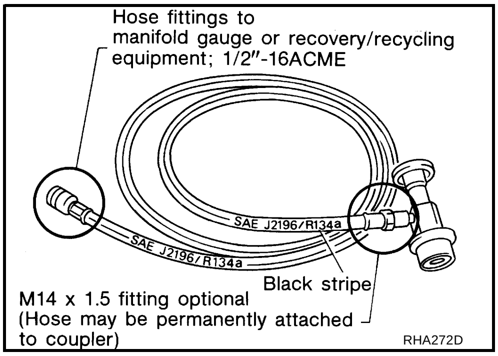

SERVICE COUPLERS

Never attempt to connect HFC-134a (R-134a) service couplers to a CFC-12 (R-12) A/C system. The HFC-134a (R-134a) couplers will not properly connect to the CFC-12 (R-12) system. However, if an improper connection is attempted, discharging and contamination may occur.

Shut-off valve rotation	A/C service valve
Clockwise	Open
Counterclockwise	Close

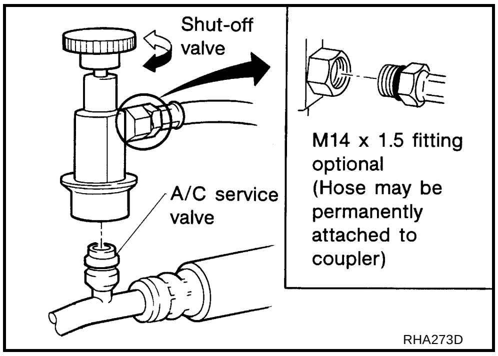

REFRIGERANT WEIGHT SCALE

Verify that no refrigerant other than HFC-134a (R-134a) and specified lubricants have been used with the scale. If the scale controls refrigerant flow electronically, the hose fitting must be 1/2″-16 ACME.

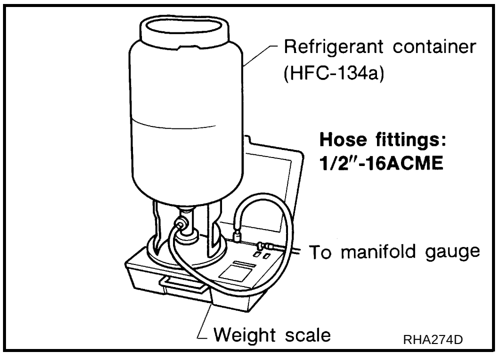

CHARGING CYLINDER

Using a charging cylinder is not recommended. Refrigerant may be vented into air from cylinder’s top valve when filling the cylinder with refrigerant. Also, the accuracy of the cylinder is generally less than that of an electronic scale or of quality recycle/recharge equipment.

Precautions for Leak Detection Dye

AJS001K1

- The A/C system contains a fluorescent leak detection dye used for locating refrigerant leaks. An ultraviolet (UV) lamp is required to illuminate the dye when inspecting for leaks.
- Always wear fluorescence enhancing UV safety goggles to protect your eyes and enhance the visibility of the fluorescent dye.
- The fluorescent dye leak detector is not a replacement for an electronic refrigerant leak detector. The fluorescent dye leak detector should be used in conjunction with an electronic refrigerant leak detector to (SST: J-41995) pin-point refrigerant leaks.
- For your safety and your customer’s satisfaction, read and follow all manufacture’s operating instructions and precautions prior to performing the work.
- A compressor shaft seal should not be repaired because of dye seepage. The compressor shaft seal should only be repaired after confirming the leak with an electronic refrigerant leak detector (SST: J-41995).
- Always remove any remaining dye from the leak area after repairs are complete to avoid a misdiagnosis during a future service.

- Do not allow dye to come into contact with painted body panels or interior components. If dye is spilled, clean immediately with the approved dye cleaner. Fluorescent dye left on a surface for an extended period of time cannot be removed.
- Do not spray the fluorescent dye cleaning agent on hot surfaces (engine exhaust manifold, etc.).
- Do not use more than one refrigerant dye bottle (1/4 ounce / 7.4 cc) per A/C system.
- Leak detection dyes for HFC-134a (R-134a) and CFC-12 (R-12) A/C systems are different. Do not use HFC-134a (R-134a) leak detection dye in CFC-12 (R-12) A/C system or CFC-12 (R-12) leak detection dye in HFC-134a (R-134a) A/C system or A/C system damage may result.
- The fluorescent properties of the dye will remain for over three (3) years unless a compressor malfunction occurs.

IDENTIFICATION

NOTE:
Vehicles with factory installed fluorescent dye have a green label.
Vehicles without factory installed fluorescent dye have a blue label.

IDENTIFICATION LABEL FOR VEHICLE

Vehicles with factory installed fluorescent dye have this identification label on the front side of hood.

PREPARATION

PFP:00002

Special Service Tools

AJS001O3

The actual shapes of Kent-Moore tools may differ from those of special service tools illustrated here.

Tool number (Kent-Moore No.) Tool name		Description
KV99106100 (J-41260) Clutch disc wrench	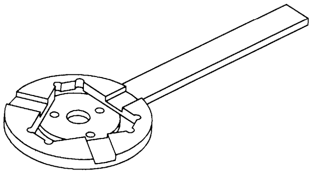 S-NT232 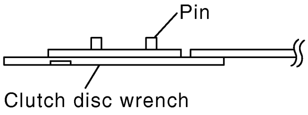 SJIA1168E	Removing shaft nut and clutch disc
KV99232340 (J-38874) Clutch disc puller	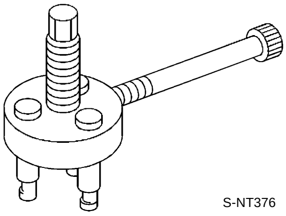 S-NT376	Removing clutch disc
KV99106200 (J-41261) Pulley installer	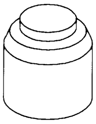 S-NT235	Installing pulley

HFC-134a (R-134a) Service Tools and Equipment

AJS001O4

Never mix HFC-134a (R-134a) refrigerant and/or its specified lubricant with CFC-12 (R-12) refrigerant and/or its lubricant.
Separate and non-interchangeable service equipment must be used for handling each type of refrigerant/lubricant.
Refrigerant container fittings, service hose fittings and service equipment fittings (equipment which handles refrigerant and/or lubricant) are different between CFC-12 (R-12) and HFC-134a (R-134a). This is to avoid mixed use of the refrigerants/lubricant.
Adapters that convert one size fitting to another must never be used: refrigerant/lubricant contamination will occur and compressor malfunction will result.

Tool number (Kent-Moore No.) Tool name		Description
HFC-134a (R-134a) refrigerant	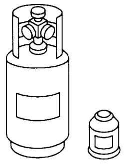 S-NT196	Container color: Light blue Container marking: HFC-134a (R-134a) Fitting size: Thread size ● Large container 1/2″ -16 ACME
KLH00-PAGS0 (-) Nissan A/C System Oil Type S (DH-PS)	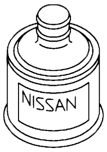 S-NT197	Type: Polyalkylene glycol oil (PAG), type S (DH-PS) Application: HFC-134a (R-134a) wobble (swash) plate compressors (Nissan only) Capacity: 40 mℓ (1.4 Imp fl oz)
(ACR2005-NI) ACR5 A/C Service Center	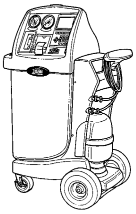 WJIA0293E	Function: Refrigerant recovery, recycling and recharging
(J-41995) Electrical leak detector	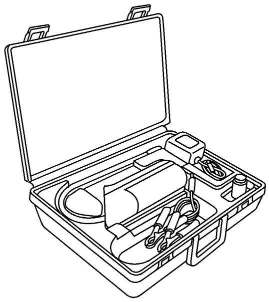 AHA281A	Power supply: DC 12V (Battery terminal)

Tool number (Kent-Moore No.) Tool name		Description
(J-43926) Refrigerant dye leak detection kit Kit includes: (J-42220) UV lamp and UV safety goggles (J-41459) HFC-134a (R-134a) dye injector Use with J-41447, 1/4 ounce bottle (J-41447) HFC-134a (R-134a) fluorescent leak detection dye (Box of 24, 1/4 ounce bottles) (J-43872) Refrigerant dye cleaner	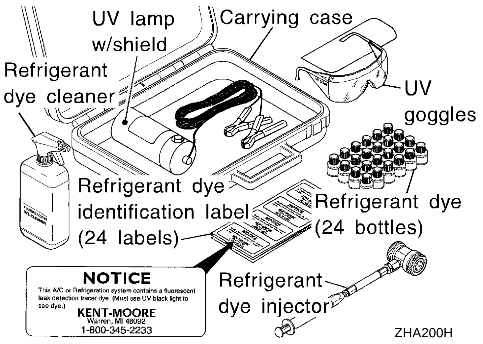 ZHA200H	Power supply: DC 12V (Battery terminal)
(J-42220) UV lamp and UV safety goggles	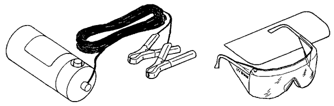 SHA438F	Power supply: DC 12V (Battery terminal) For checking refrigerant leak when fluorescent dye is installed in A/C system Includes: UV lamp and UV safety goggles
(J-41447) HFC-134a (R-134a) fluorescent leak detection dye (Box of 24, 1/4 ounce bottles)	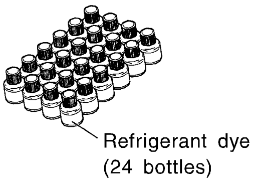 SHA439F	Application: For HFC-134a (R-134a) PAG oil Container: 1/4 ounce (7.4cc) bottle (Includes self-adhesive dye identification labels for affixing to vehicle after charging system with dye.)
(J-41459) HFC-134a (R-134a) dye injector Use with J-41447, 1/4 ounce bottle	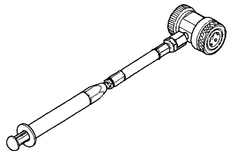 SHA440F	For injecting 1/4 ounce of fluorescent leak detection dye into A/C system
(J-43872) Refrigerant dye cleaner	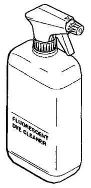 SHA441F	For cleaning dye spills
(J-39183) Manifold gauge set (with hoses and couplers)	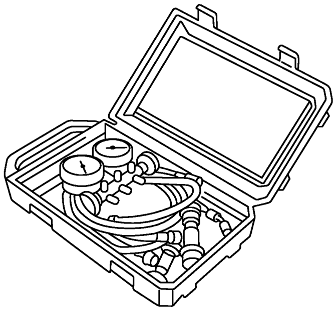 RJIA0196E	Identification: ● The gauge face indicates HFC-134a (R-134a). Fitting size: Thread size ● 1/2″ -16 ACME

Tool number (Kent-Moore No.) Tool name		Description
Service hoses ● (J-39501-72) High-pressure side hose ● (J-39502-72) Low-pressure side hose ● (J-39476-72) Utility hose	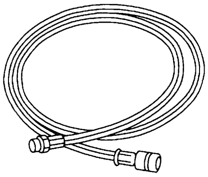 S-NT201	Hose color: ● Low hose: Blue with black stripe ● High hose: Red with black stripe ● Utility hose: Yellow with black stripe or green with black stripe Hose fitting to gauge: ● 1/2″ -16 ACME
Service couplers ● (J-39500-20) High-pressure side coupler ● (J-39500-24) Low-pressure side coupler	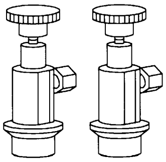 S-NT202	Hose fitting to service hose: M14 × 1.5 fitting is optional or permanently attached.
(J-39650) Refrigerant weight scale	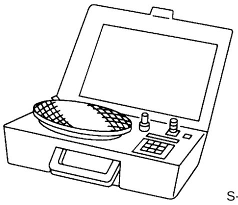 S-NT200	For measuring of refrigerant Fitting size: Thread size 1/2″ -16 ACME
(J-39649) Vacuum pump (Including the isolator valve)	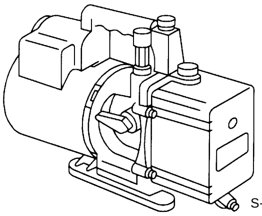 S-NT203	Capacity: ● Air displacement: 4 CFM ● Micron rating: 20 microns ● Oil capacity: 482 g (17 oz) Fitting size: Thread size 1/2″ -16 ACME

Commercial Service Tools

AJS001O5

Tool name		Description
Refrigerant identifier equipment	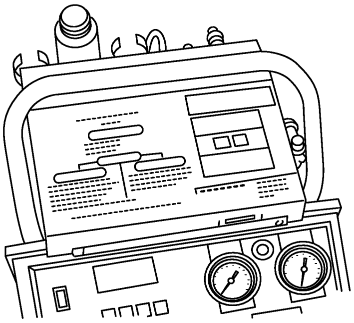 RJIA0197E	Checking for refrigerant purity and system contamination
Power tool	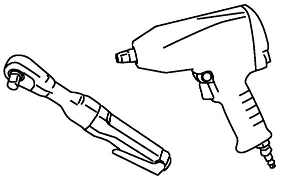 PBIC0190E	For loosening bolts and nuts

REFRIGERATION SYSTEM

PFP:KA990

Refrigerant Cycle

AJS001K5

REFRIGERANT FLOW

The refrigerant flows in the standard pattern, that is, through the compressor, the condenser with liquid tank, through the evaporator, and back to the compressor. The refrigerant evaporation through the evaporator is controlled by an externally equalized expansion valve, located inside the evaporator case.

FREEZE PROTECTION

To prevent evaporator frozen up, the evaporator air temperature is monitored, and the voltage signal to the auto amp. will make the A/C relay go OFF and stop the compressor.

Refrigerant System Protection

AJS001K6

REFRIGERANT PRESSURE SENSOR

The refrigerant system is protected against excessively high- or low-pressures by the refrigerant pressure sensor, located on the liquid tank. If the system pressure rises above, or falls below the specifications, the refrigerant pressure sensor detects the pressure inside the refrigerant line and sends the voltage signal to the ECM. ECM makes the A/C relay go OFF and stops the compressor when pressure on the high-pressure side detected by refrigerant pressure sensor is over about 2,746 kPa (28 kg/cm^2 , 398 psi), or below about 134 kPa (1.4 kg/cm^2 , 20 psi).

PRESSURE RELIEF VALVE

The refrigerant system is also protected by a pressure relief valve, located in the rear head of the compressor. When the pressure of refrigerant in the system increases to an unusual level [more than 3,727 kPa (38 kg/cm^2 , 540 psi)], the release port on the pressure relief valve automatically opens and releases refrigerant into the atmosphere.

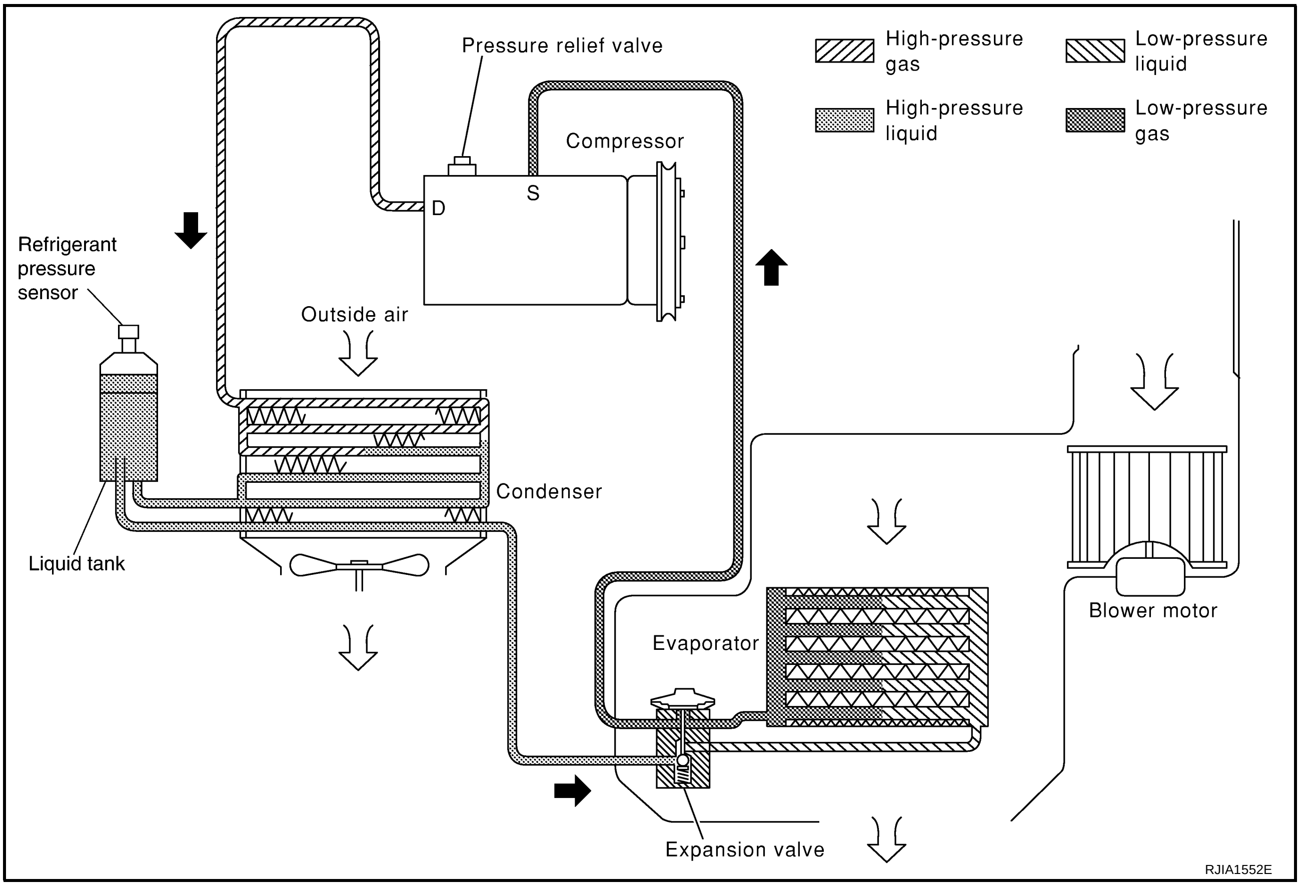

V-6 Variable Displacement Compressor

AJS001K7

GENERAL INFORMATION

1. The V-6 variable compressor differs from previous units. The vent temperatures of the V-6 variable compressor do not drop too far below 5°C (41°F) when:
   Evaporator intake air temperature is less than 20°C (68°F).
   Engine is running at speeds less than 1,500 rpm.
   This is because the V-6 compressor provides a means of “capacity” control.
2. The V-6 variable compressor provides refrigerant control under varying conditions. During cold winters, it may not produce high refrigerant pressure discharge (compared to previous units) when used with air conditioning systems.
3. A “clanking” sound may occasionally be heard during refrigerant charge. The sound indicates that the tilt angle of the wobble (swash) plate has changed and is not a malfunction.
4. For air conditioning systems with the V-6 compressor, the clutch remains engaged unless: the system main switch, fan switch or ignition switch is turned OFF. When ambient (outside) temperatures are low or when the amount of refrigerant is insufficient, the clutch is disengaged to protect the compressor.
5. A constant range of suction pressure is maintained when engine speed is greater than a certain value. It normally ranges from 147 to 177 kPa (1.5 to 1.8 kg/cm^2 , 21 to 26 psi) under varying conditions.
   In previous compressors, however, suction pressure was reduced with increases in engine speed.

DESCRIPTION
General

The variable compressor is basically a swash plate type that changes piston stroke in response to the required cooling capacity.

The tilt of the wobble (swash) plate allows the piston's stroke to change so that refrigerant discharge can be continuously changed from 13.5 to 146 cm^3 (0.824 to 8.91 cu in).

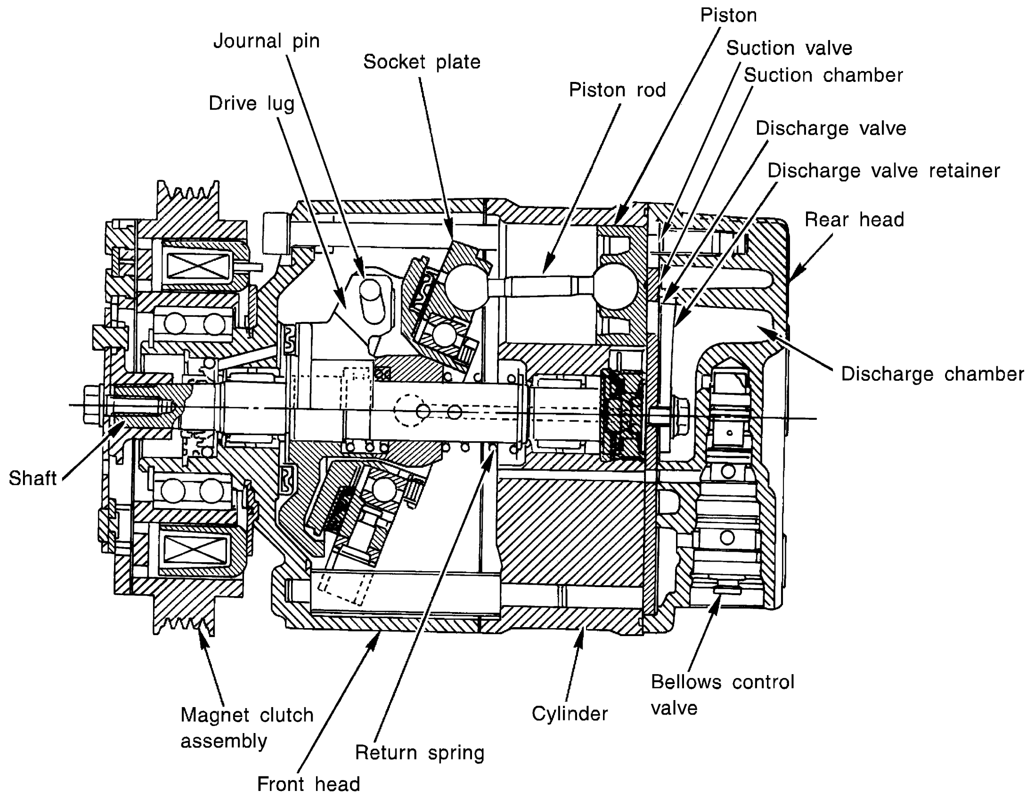

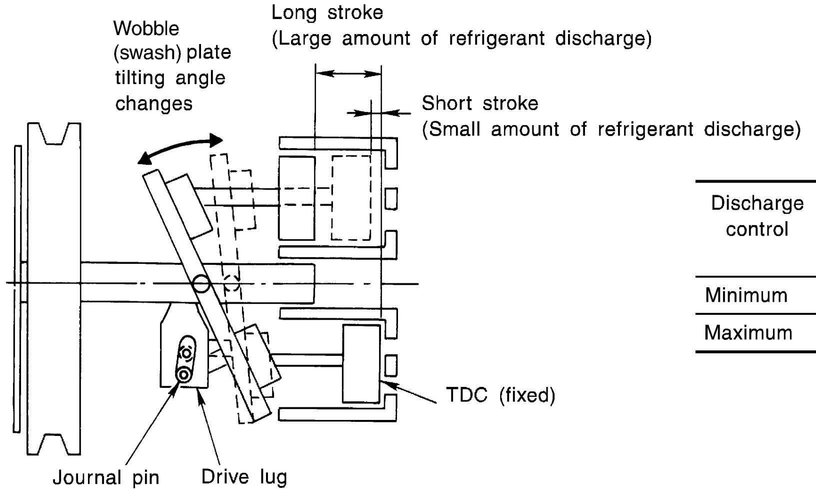

Discharge control	Discharge capacity cm^3 (cu in)/rev.	Piston stroke length mm (in)
Minimum	13.5 (0.824)	2.3 (0.091)
Maximum	146 (8.91)	25 (0.984)

SJIA0631E

Operation

1. Operation Control Valve
   Operation control valve is located in the suction port (low-pressure) side, and opens or closes in response to changes in refrigerant suction pressure.
   Operation of the valve controls the internal pressure of the crankcase.
   The angle of the wobble (swash) plate is controlled between the crankcase's internal pressure and the piston cylinder pressure.
2. Maximum Cooling
   Refrigerant pressure on the low-pressure side increases with an increase in heat loads.
   When this occurs, the control valve's bellows compress to open the low-pressure side valve and close the high-pressure side valve.
   This causes the following pressure changes:
   - The crankcase's internal pressure to equal the pressure on the low-pressure side;
   - The cylinder's internal pressure to be greater than the crankcase's internal pressure.

   Under this condition, the wobble (swash) plate is set to the maximum stroke position.

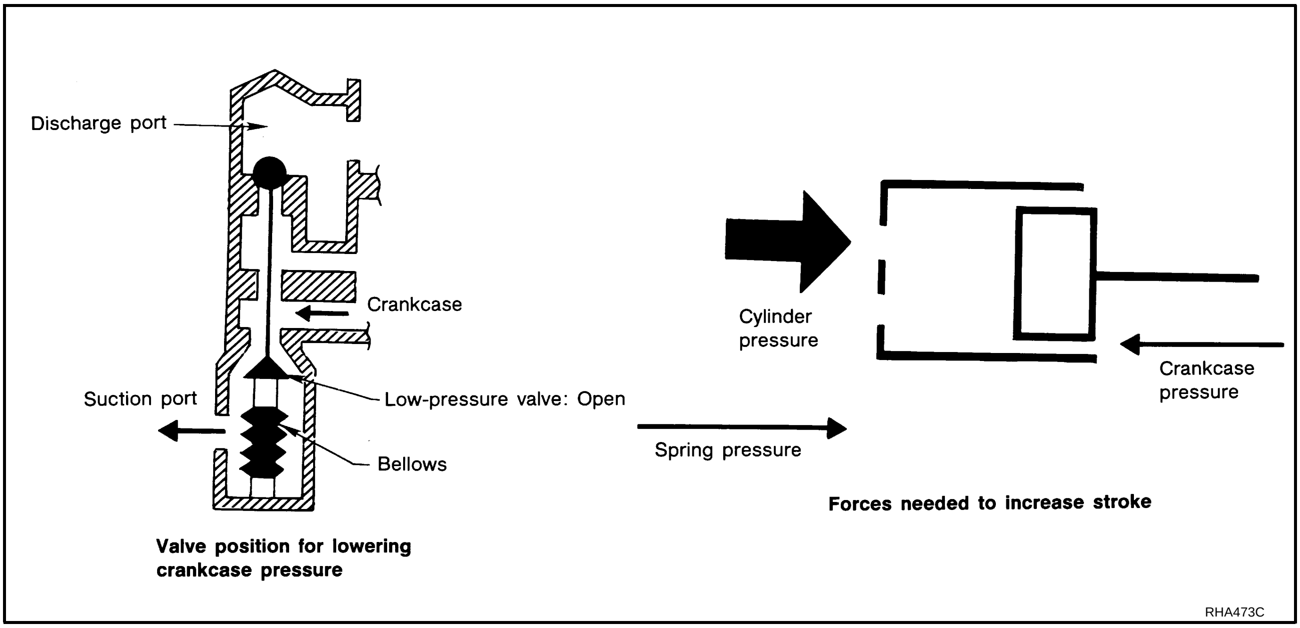

3. Capacity Control
   - Refrigerant pressure on suction side is low during high speed driving or when ambient or interior temperature is low.
   - The bellows expands when refrigerant pressure on the suction pressure side drops below approxi mately 177 kPa (1.8 kg/cm^2 , 26 psi).

   Since suction pressure is low, it makes the suction port close and the discharge port open. Thus, crankcase pressure becomes high as high-pressure enters the crankcase.
   - The force acts around the journal pin near the wobble (swash) plate, and is generated by the pressure difference between before and behind the piston.

   The drive lug and journal pin are located where the piston generates the highest pressure. Piston pressure is between suction pressure Ps and discharge pressure Pd, which is near suction pressure Ps. If crankcase pressure Pc rises due to capacity control, the force around the journal pin makes the wobble (swash) plate angle decrease and also the piston stroke decrease. In other words, crankcase pressure increase triggers pressure difference between the piston and the crankcase. The pressure difference changes the angle of the wobble (swash) plate.

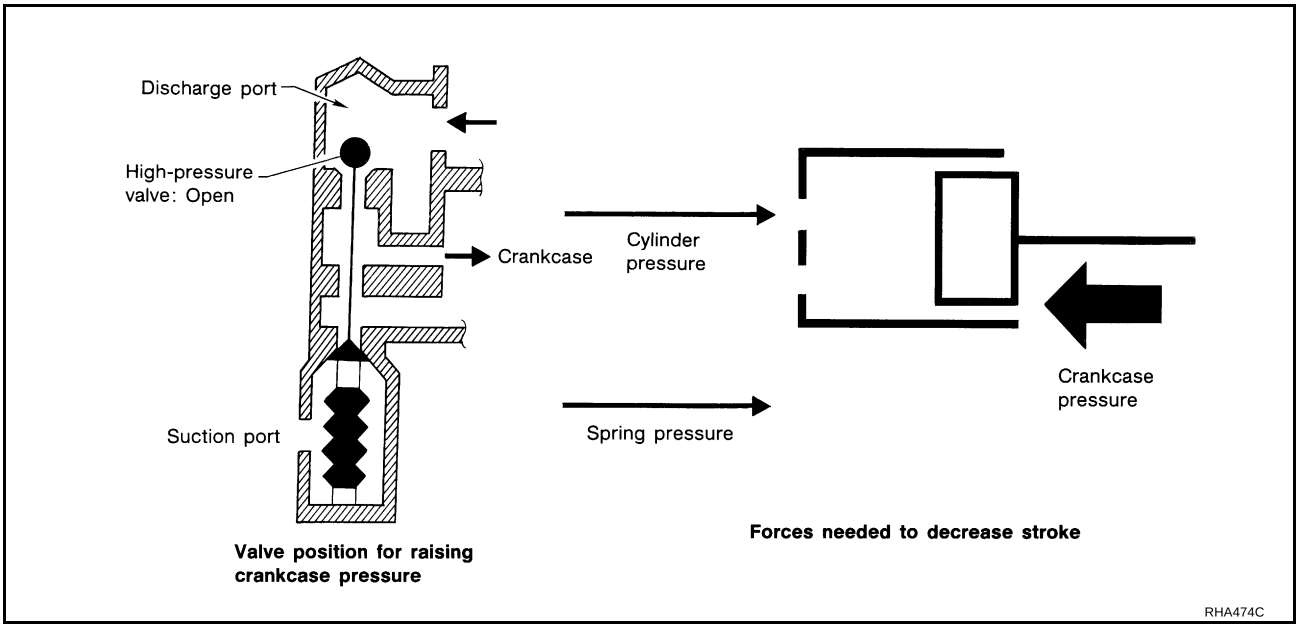

Discharge port
High-pressure valve: Open
Crankcase
Cylinder pressure
Suction port
Spring pressure
Crankcase pressure
Valve position for raising crankcase pressure
Forces needed to decrease stroke
RHA474C

Component Layout

AJS001K8

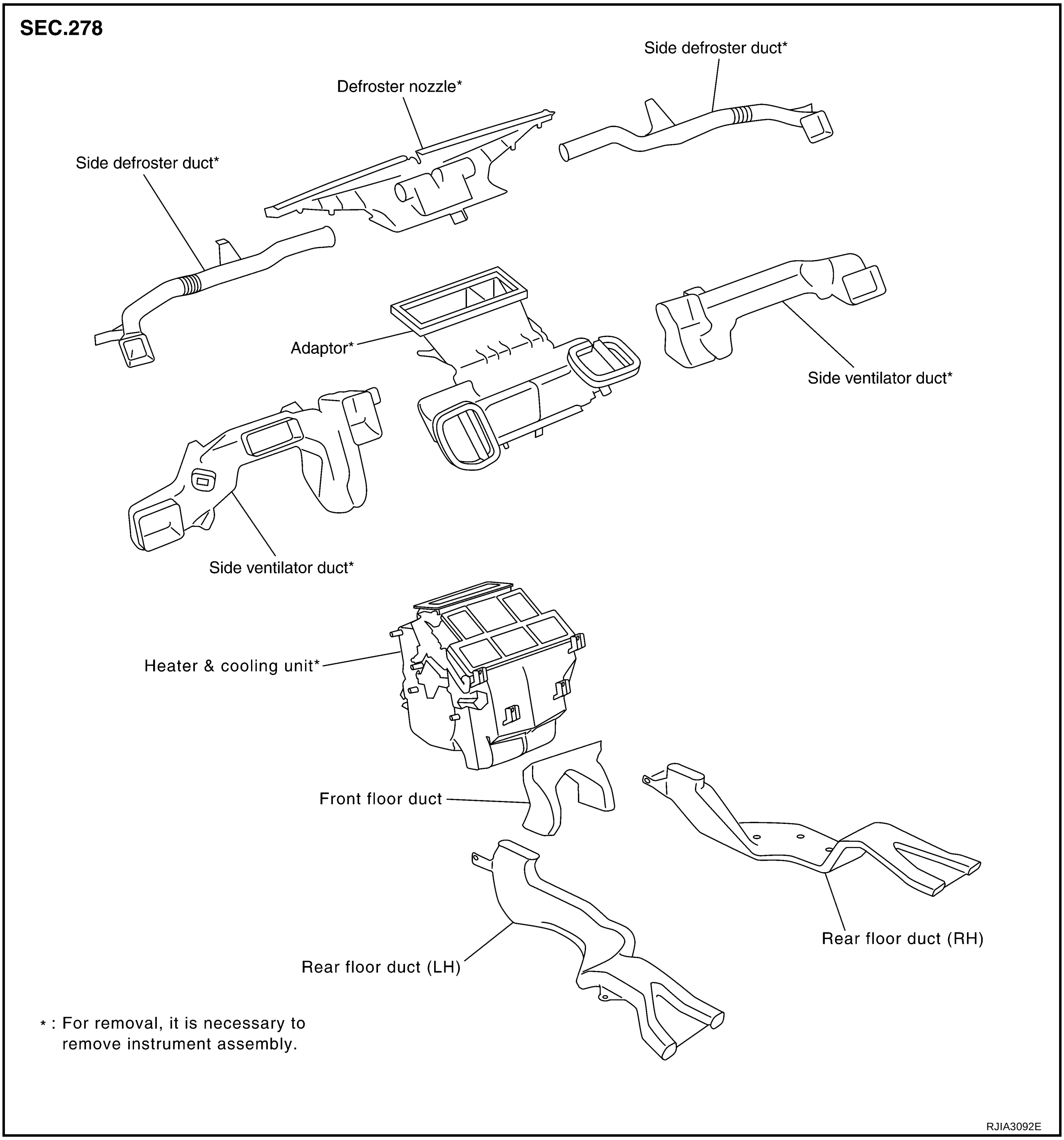

LUBRICANT

PFP:KLG00

Maintenance of Lubricant Quantity in Compressor

AJS001K9

The lubricant in the compressor circulates through the system with the refrigerant. Add lubricant to compressor when replacing any component or after a large refrigerant leakage occurred. It is important to maintain the specified amount.
If lubricant quantity is not maintained properly, the following malfunctions may result:

- Lack of lubricant: May lead to a seized compressor.
- Excessive lubricant: Inadequate cooling (thermal exchange interference)

LUBRICANT

Name : Nissan A/C System Oil Type S
Part number : KLH00-PAGS0

LUBRICANT RETURN OPERATION

Adjust the lubricant quantity according to the test group shown below.

1. CHECK LUBRICANT RETURN OPERATION

Can lubricant return operation be performed?

- A/C system works properly.
- There is no evidence of a large amount of lubricant leakage.

CAUTION:
If excessive lubricant leakage is noted, never perform the lubricant return operation.

OK or NG

OK >> GO TO 2.
NG >> GO TO 3.

2. PERFORM LUBRICANT RETURN OPERATION, PROCEEDING AS FOLLOWS

1. Start engine, and set the following conditions:
   - Engine speed: Idling to 1,200 rpm
   - A/C switch: ON
   - Blower speed: Max. position
   - Temp. control: Optional [Set so that intake air temperature is 25 to 30°C (77 to 86°F).]
   - Intake position: Recirculation (REC)
2. Perform lubricant return operation for about 10 minutes.
3. Stop engine.

>> GO TO 3.

3. CHECK REPLACEMENT PART

Should the compressor be replaced?

YES >> GO TO ATC-23, "LUBRICANT ADJUSTING PROCEDURE FOR COMPRESSOR REPLACEMENT" .
NO >> GO TO ATC-23, "LUBRICANT ADJUSTING PROCEDURE FOR COMPONENTS REPLACEMENT EXCEPT COMPRESSOR" .

LUBRICANT ADJUSTING PROCEDURE FOR COMPONENTS REPLACEMENT EXCEPT COMPRESSOR

After replacing any of the following major components, add the correct amount of lubricant to the system.
Amount of lubricant to be added

Part replaced	Lubricant to be added to system Amount of lubricant mℓ (Imp fl oz)	Remarks
Evaporator	75 (2.6)	-
Condenser	35 (1.2)	-
Liquid tank	10 (0.4)	-
In case of refrigerant leak	30 (1.1)	Large leak
	-	Small leak *1

*1: If refrigerant leak is small, no addition of lubricant is needed.

LUBRICANT ADJUSTING PROCEDURE FOR COMPRESSOR REPLACEMENT

1. Before connecting recovery/recycling recharging equipment to vehicle, check recovery/recycling recharging equipment gauges. No refrigerant pressure should be displayed. If NG, recover refrigerant from equipment lines.
2. Connect recovery/recycling recharging equipment to vehicle. Confirm refrigerant purity in supply tank using recovery/recycling recharging equipment and refrigerant identifier. If NG, refer to ATC-5, "CONTAMINATED REFRIGERANT" .
3. Confirm refrigerant purity in vehicle A/C system using recovery/recycling recharging equipment and refrigerant identifier. If NG, refer to ATC-5, "CONTAMINATED REFRIGERANT" .
4. Discharge refrigerant into the refrigerant recovery/recycling equipment. Measure lubricant discharged into the recovery/recycling equipment.
5. Drain the lubricant from the old (removed) compressor into a graduated container and recover the amount of lubricant drained.
6. Drain the lubricant from the new compressor into a separate, clean container.
7. Measure an amount of new lubricant installed equal to amount drained from old compressor. Add this lubricant to new compressor through the suction port opening.
8. Measure an amount of new lubricant equal to the amount recovered during discharging. Add this lubricant to new compressor through the suction port opening.
9. If the liquid tank also needs to be replaced, add another 5 mℓ (0.2 Imp fl oz) of lubricant at this time.
   Do not add this 5 mℓ (0.2 Imp fl oz) of lubricant only when replaces the compressor.

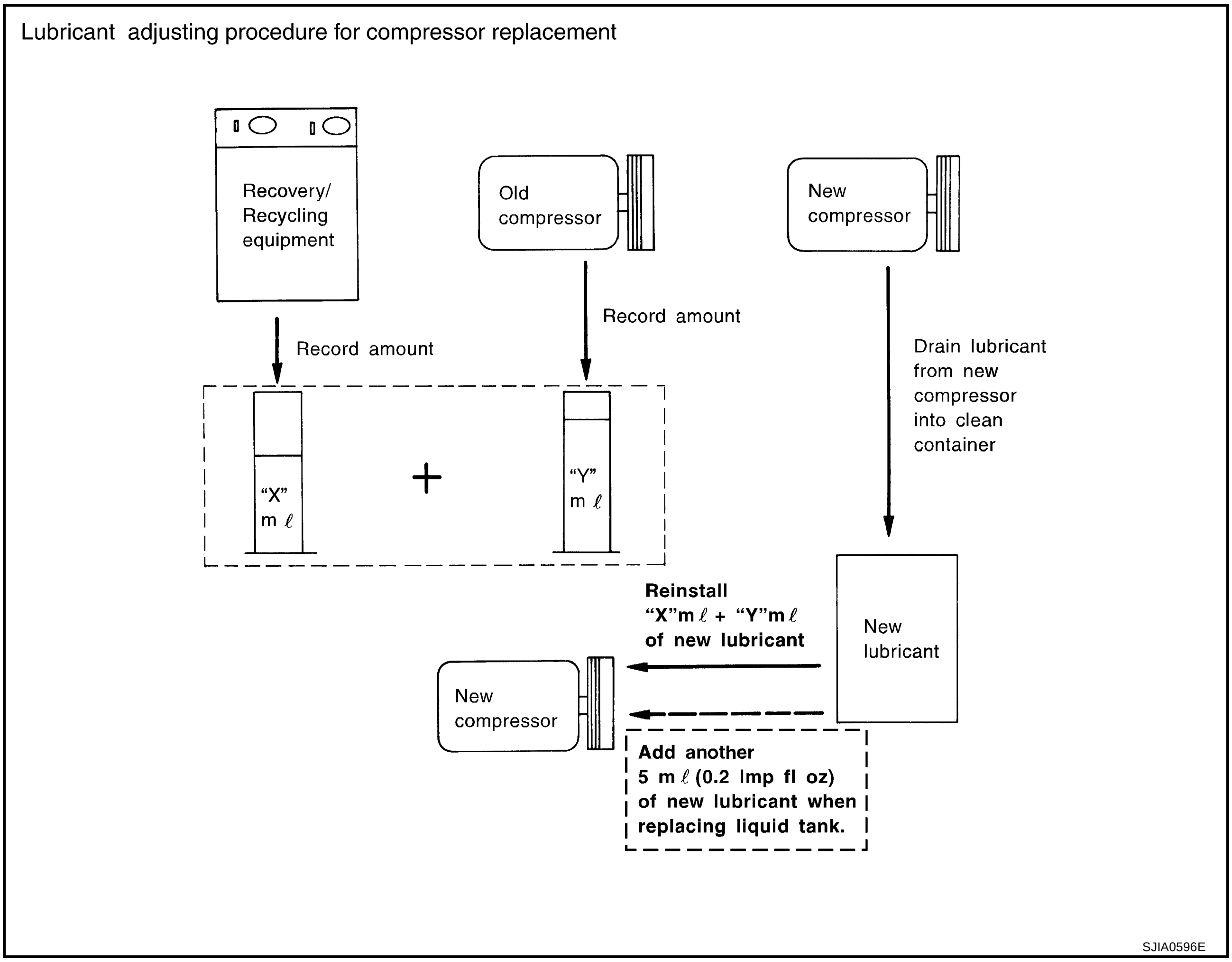
Lubricant adjusting procedure for compressor replacement
Recovery/ Recycling equipment
Old compressor
New compressor
Record amount
Record amount
Drain lubricant from new compressor into clean container
"X" m ℓ
+
"Y" m ℓ
Reinstall "X"m ℓ + "Y"m ℓ of new lubricant
New lubricant
New compressor
Add another 5 m ℓ (0.2 Imp fl oz) of new lubricant when replacing liquid tank.
SJIA0596E

AIR CONDITIONER CONTROL

PFP:27500

Description of Air Conditioner LAN Control System

AJS001KA

The LAN (Local Area Network) system consists of auto amp., mode door motor, air mix door motor and intake door motor.
A configuration of these components is shown in the diagram below.

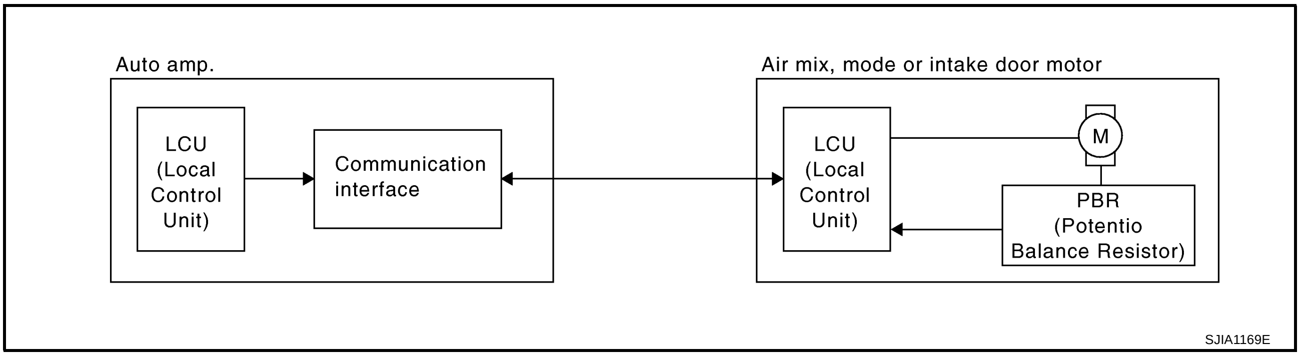

System Construction

AJS001KB

A small network is constructed between the auto amp., air mix door motor, mode door motor and intake door motor. The auto amp. and motors are connected by data transmission lines and motor power supply lines. The LAN network is built through the ground circuits of each door motor.
Addresses, motor opening angle signals, motor stop signals and error checking messages are all transmitted through the data transmission lines connecting the auto amp. and each door motor.
The following functions are contained in LCUs built into air mix door motor, mode door motor and intake door motor.

- Address
- Motor opening angle signal
- Data transmission
- Motor stop and drive decision
- Opening angle sensor (PBR function)
- Comparison
- Decision (Auto amp. indicated value and motor opening angle comparison)

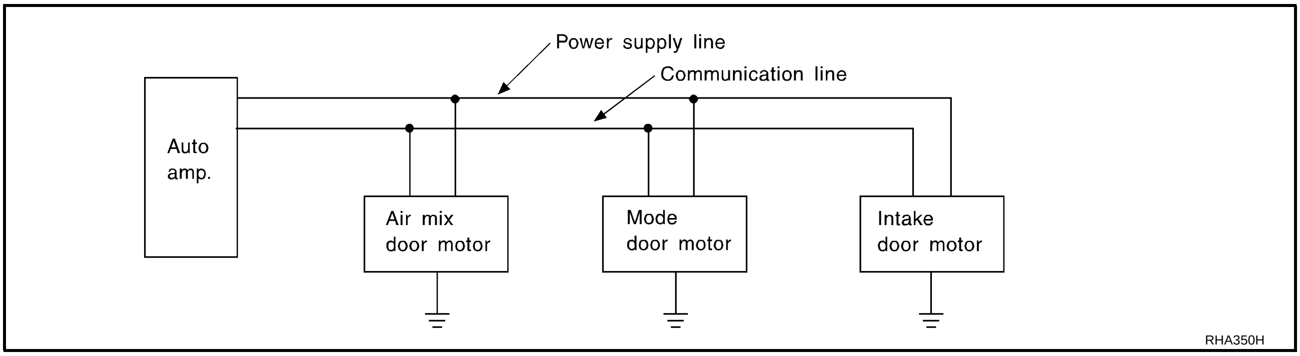

OPERATION

The auto amp. receives data from each of the sensors. The auto amp. sends mode door, air mix door and intake door opening angle data to the mode door motor LCU, air mix door motor LCU and intake door motor LCU.
The mode door motor, air mix door motor and intake door motor read their respective signals according to the address signal. Opening angle indication signals received from the auto amp. and each of the motor position sensors is compared by the LCUs in each motor with the existing decision and opening angles. Subsequently, HOT/COLD, DEF/VENT and FRESH/RECIRCULATION operation is selected. The new selection data is returned to the auto amp.

A
B
C
D
E
F
G
H
I
ATC
K
L
M

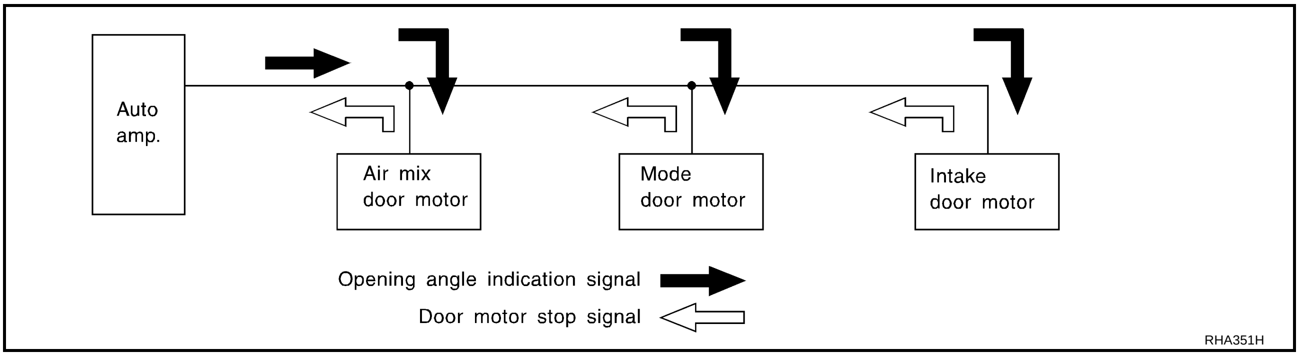

TRANSMISSION DATA AND TRANSMISSION ORDER

Auto amp. data is transmitted consecutively to each of the door motor following the form shown in figure below.

Start:

Initial compulsory signal sent to each of the door motor.

Address:

Data sent from the auto amp. are selected according to data-based decisions made by the air mix door motor, mode door motor and intake door motor.
If the addresses are identical, the opening angle data and error check signals are received by the door motor LCUs. The LCUs then make the appropriate error decision. If the opening angle data is usual, door control begins.
If an error exists, the received data is rejected and corrected data received. Finally, door control is based upon the corrected opening angle data.

Opening Angle:

Data that shows the indicated door opening angle of each door motor.

Error Check:

Procedure by which sent and received data is checked for errors. Error data is then compiled. The error check prevents corrupted data from being used by the air mix door motor, mode door motor and intake door motor. Error data can be related to the following symptoms.

- Malfunction of electrical frequency
- Poor electrical connections
- Signal leakage from transmission lines
- Signal level fluctuation

Stop Signal:

At the end of each transmission, a stop operation, in-operation, or internal malfunction message is delivered to the auto amp. This completes one data transmission and control cycle.

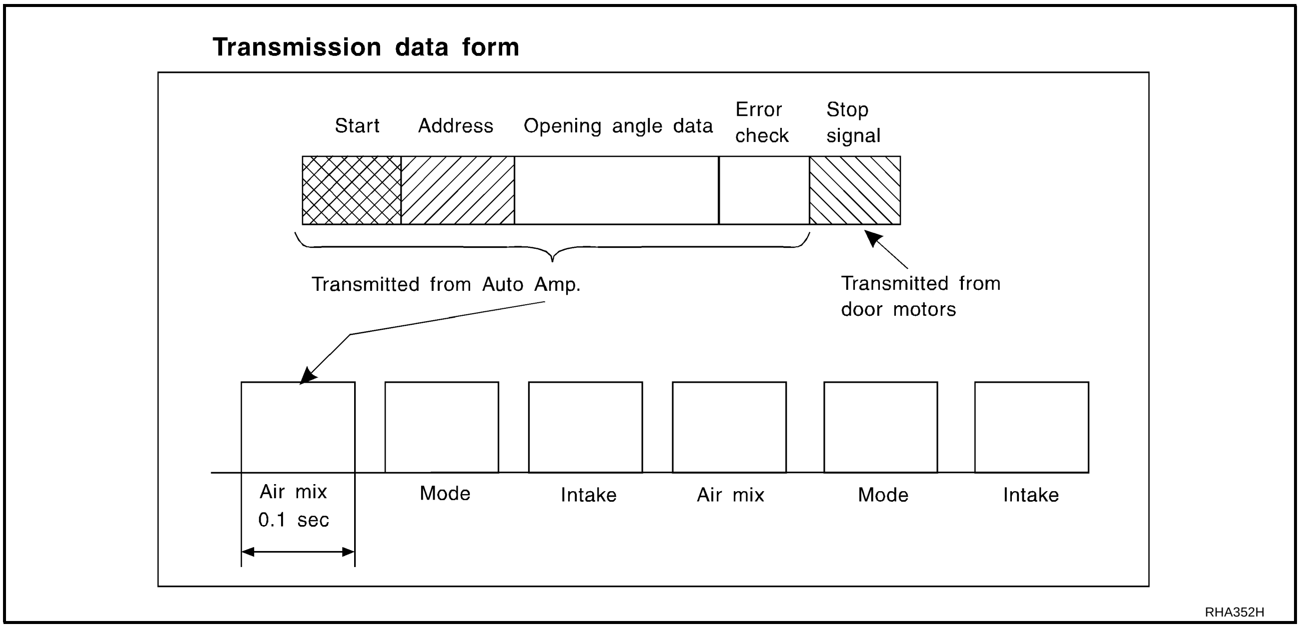

AIR MIX DOOR CONTROL (AUTOMATIC TEMPERATURE CONTROL)

The air mix door is automatically controlled so that in-vehicle temperature is maintained at a predetermined value by the temperature setting, ambient temperature, in-vehicle temperature and amount of sunload.

FAN SPEED CONTROL

Blower speed is automatically controlled by the temperature setting, ambient temperature, in-vehicle temperature, intake temperature, amount of sunload and air mix door position.
With FAN control dial set to AUTO, the blower motor starts to gradually increase air flow volume.
When engine coolant temperature is low, the blower motor operation is delayed to prevent cool air from flowing.

INTAKE DOOR CONTROL

The intake doors are automatically controlled by the temperature setting, ambient temperature, in-vehicle temperature, intake temperature, amount of sunload and ON-OFF operation of the compressor.

OUTLET DOOR CONTROL

The outlet door is automatically controlled by the temperature setting, ambient temperature, in-vehicle temperature, intake temperature and amount of sunload.

MAGNET CLUTCH CONTROL

The ECM controls compressor operation using input signals from the throttle position sensor, refrigerant pressure sensor and auto amp.

SELF-DIAGNOSIS SYSTEM

The self-diagnosis system is built into the auto amp. to quickly locate the cause of symptoms.

Description of Control System

AJS001KC

The control system consists of input sensors, switches, the auto amp. (microcomputer) and outputs. The relationship of these components is shown in the diagram below:

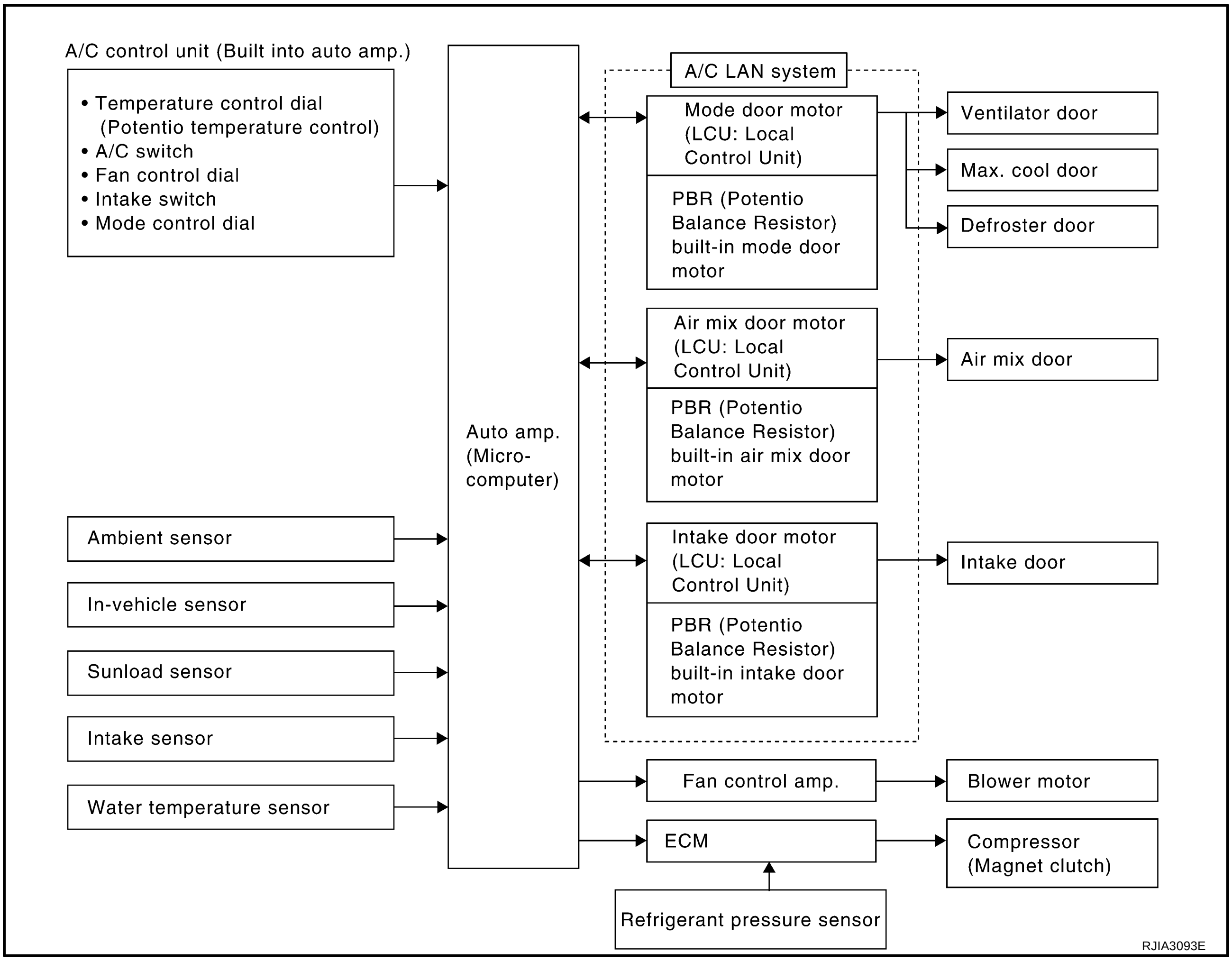

Control Operation

AJS001KD

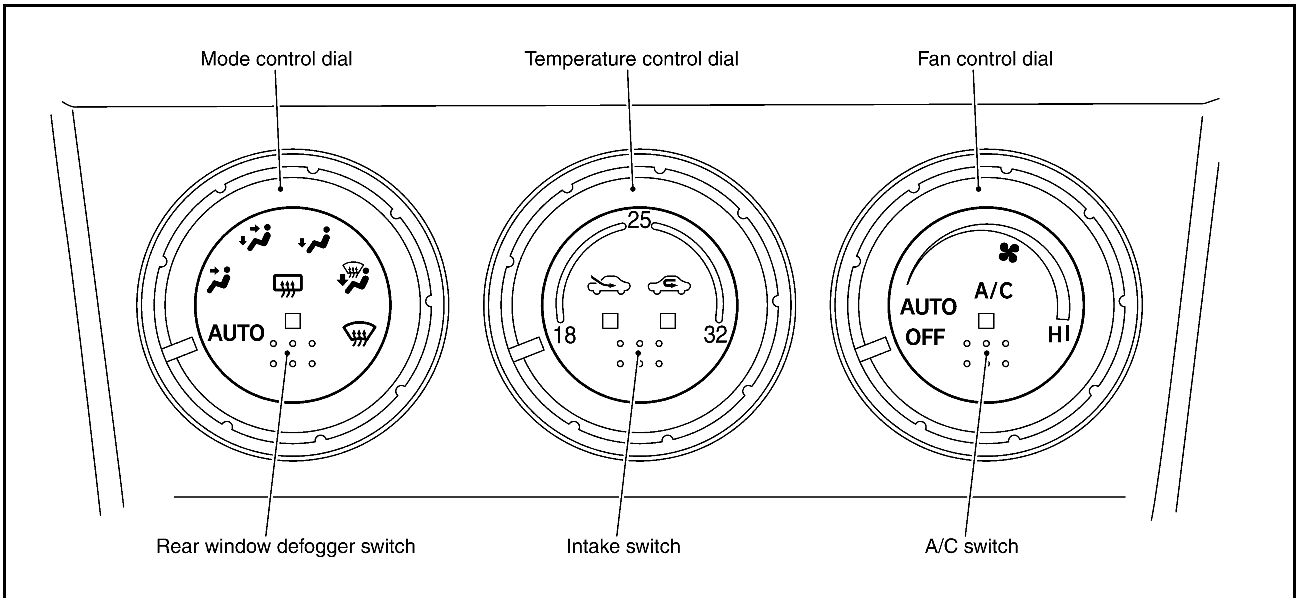

SJIA0386E

MODE CONTROL DIAL

Controls the air discharge outlets.
Positions the air outlet doors to the defrost position. Also positions the intake doors to the outside air position.
When shifting mode control dial to DEF under the following conditions, compressor is turned ON. (A/C LED ON)

- FAN: ON
- A/C: OFF

TEMPERATURE CONTROL DIAL (POTENTIO TEMPERATURE CONTROL)

Increase or decrease the set temperature.

FAN CONTROL DIAL

Automatically or manually control the blower speed. Twenty-five speeds are available for manual control. Shifting fan control dial to AUTO, compressor is turned ON automatically.

REAR WINDOW DEFOGGER SWITCH

When illumination is ON, rear window is defogged.

INTAKE SWITCH

- When intake switch is ON, FRE indicator turns ON, and air inlet is fixed to FRE.
- When press intake switch again, REC indicator turns ON, and air inlet is fixed to REC.
- When intake switch is pressed for approximately 1.5 seconds or longer, REC and FRE indicators blink twice. Then, automatic control mode is entered. Inlet status is displayed even during automatic control.
- When shifting mode control dial to D/F, D/F2 or DEF position, FRE indicator is turned ON, or when compressor is turned from ON to OFF, REC switch is automatically turned OFF (fixed to FRE mode).
  REC mode can be re-entered by pressing intake switch again. (Except DEF position)

A/C SWITCH

The compressor is ON or OFF.
(Pressing the A/C switch when the fan control dial is ON will turn off the A/C switch and compressor.)

Discharge Air Flow

AJS001KE

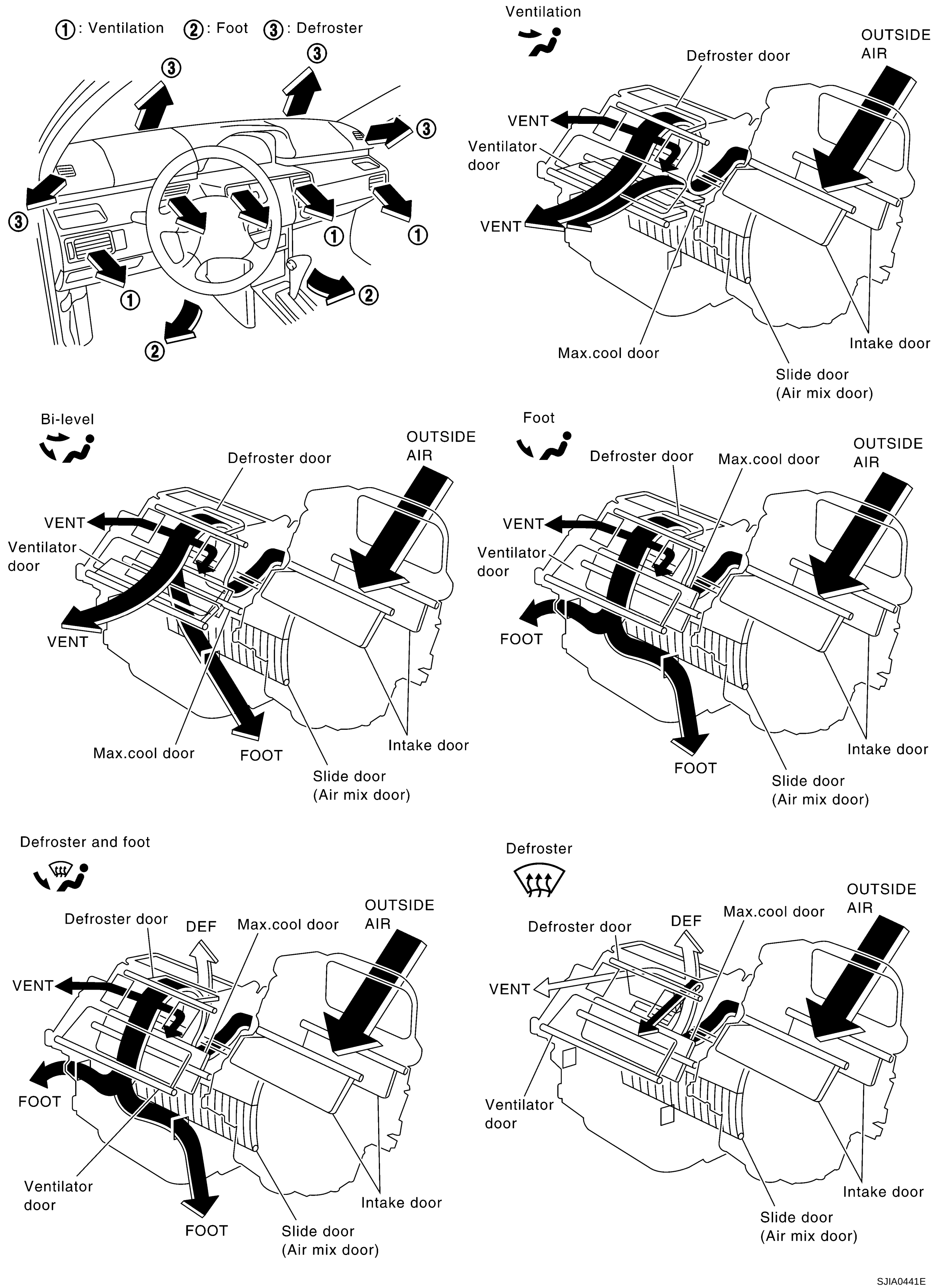

SJIA0441E

System Description

AJS001KF

SWITCHES AND THEIR CONTROL FUNCTION

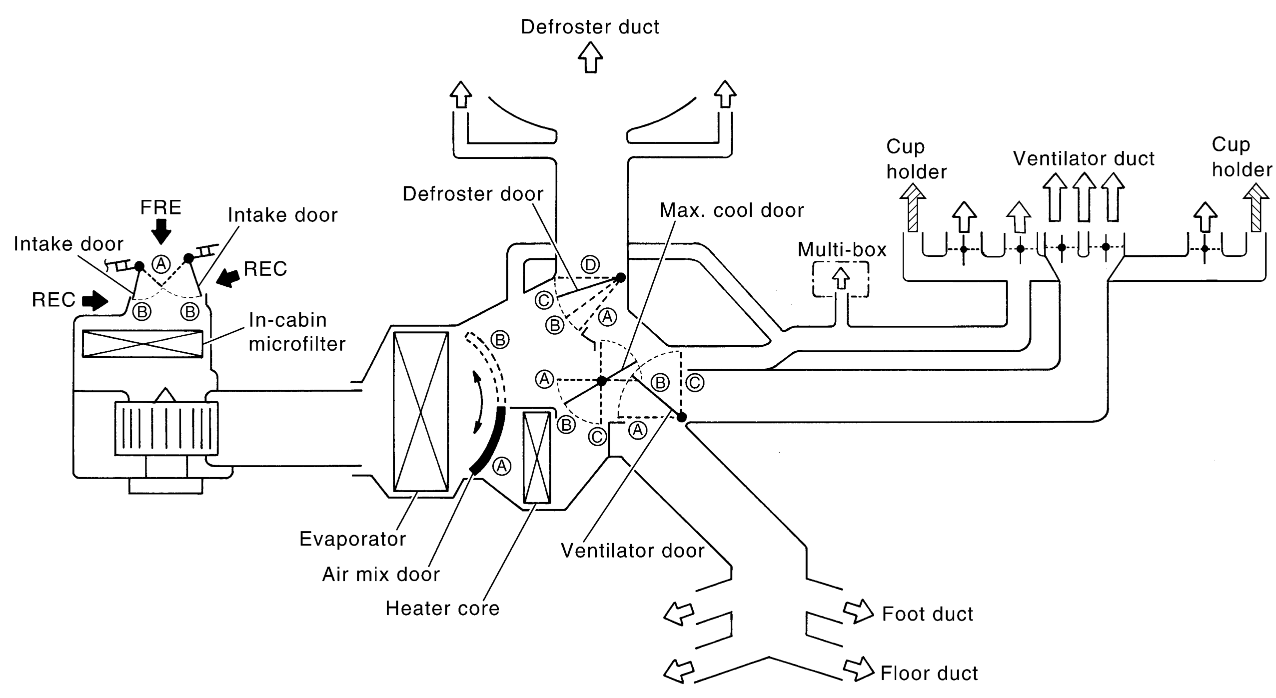

RJIA3183E

Door \ Position or switch	MODE control dial						Intake SW		Temperature control dial		
	VENT	B/L	FOOT	D/F	DEF	AUTO			18°C	~	32°C
						—					
Ventilator door	Ⓐ	Ⓑ	Ⓒ	Ⓒ	Ⓒ	AUTO	—		—		
Max. cool door	Ⓐ	Ⓑ	Ⓑ	Ⓑ	Ⓒ	AUTO	—		—		
Defroster door	Ⓓ	Ⓓ	Ⓓ or Ⓒ *1	Ⓑ	Ⓐ	AUTO	—		—		
Intake door	—			Ⓑ	Ⓑ	—	Ⓐ *2	Ⓑ *2	—		
Air mix door	—				—	—	—		Ⓐ	AUTO	Ⓑ

*1: This door position is switched by self-diagnosis STEP-6.
*2: Inlet status is displayed even during automatic control.

RJIA2822E

TROUBLE DIAGNOSIS

PFP:00004

How to Perform Trouble Diagnoses for Quick and Accurate Repair

AJS001KG

WORK FLOW

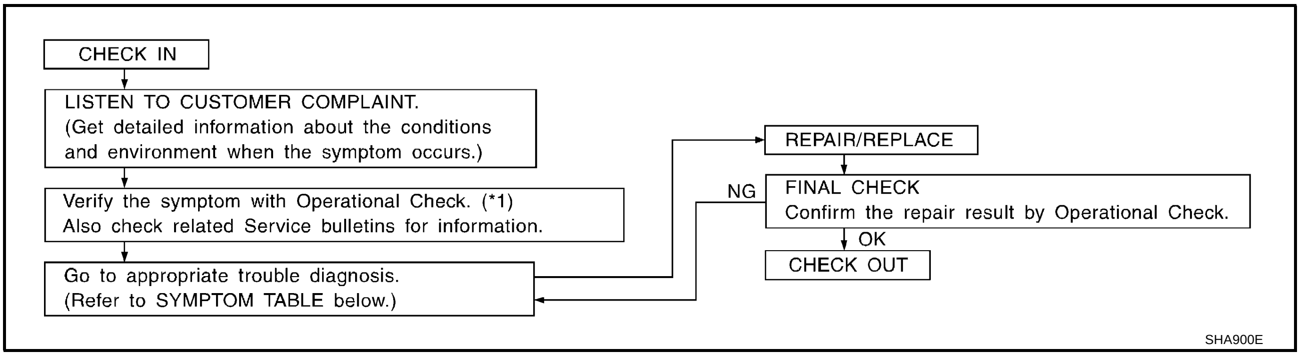

*1 ATC-50, "Operational Check"

SYMPTOM TABLE

Symptom	Reference Page	
A/C system does not come on.	Go to Trouble Diagnosis Procedure for A/C System.	ATC-51, "Power Supply and Ground Circuit for Auto Amp."
Air outlet does not change.	Go to Trouble Diagnosis Procedure for Mode Door Motor. (LAN)	ATC-56, "Mode Door Motor Circuit"
Mode door motor does not operate normally.		
Discharge air temperature does not change.	Go to Trouble Diagnosis Procedure for Air Mix Door Motor. (LAN)	ATC-59, "Air Mix Door Motor Circuit"
Air mix door motor does not operate normally.		
Intake door does not change.	Go to Trouble Diagnosis Procedure for Intake Door Motor. (LAN)	ATC-62, "Intake Door Motor Circuit"
Intake door motor does not operate normally.		
Blower motor operation is malfunctioning.	Go to Trouble Diagnosis Procedure for Blower Motor.	ATC-65, "Blower Motor Circuit"
Blower motor operation is malfunctioning under out of starting fan speed control.		
Magnet clutch does not engage.	Go to Trouble Diagnosis Procedure for Magnet Clutch.	ATC-71, "Magnet Clutch Circuit"
Insufficient cooling	Go to Trouble Diagnosis Procedure for Insufficient Cooling.	ATC-77, "Insufficient Cooling"
Insufficient heating	Go to Trouble Diagnosis Procedure for Insufficient Heating.	ATC-85, "Insufficient Heating"
Noise	Go to Trouble Diagnosis Procedure for Noise.	ATC-86, "Noise"
Self-diagnosis cannot be performed.	Go to Trouble Diagnosis Procedure for Self-diagnosis.	ATC-87, "Self-diagnosis"

Component Parts and Harness Connector Location

AJS001KH

ENGINE COMPARTMENT

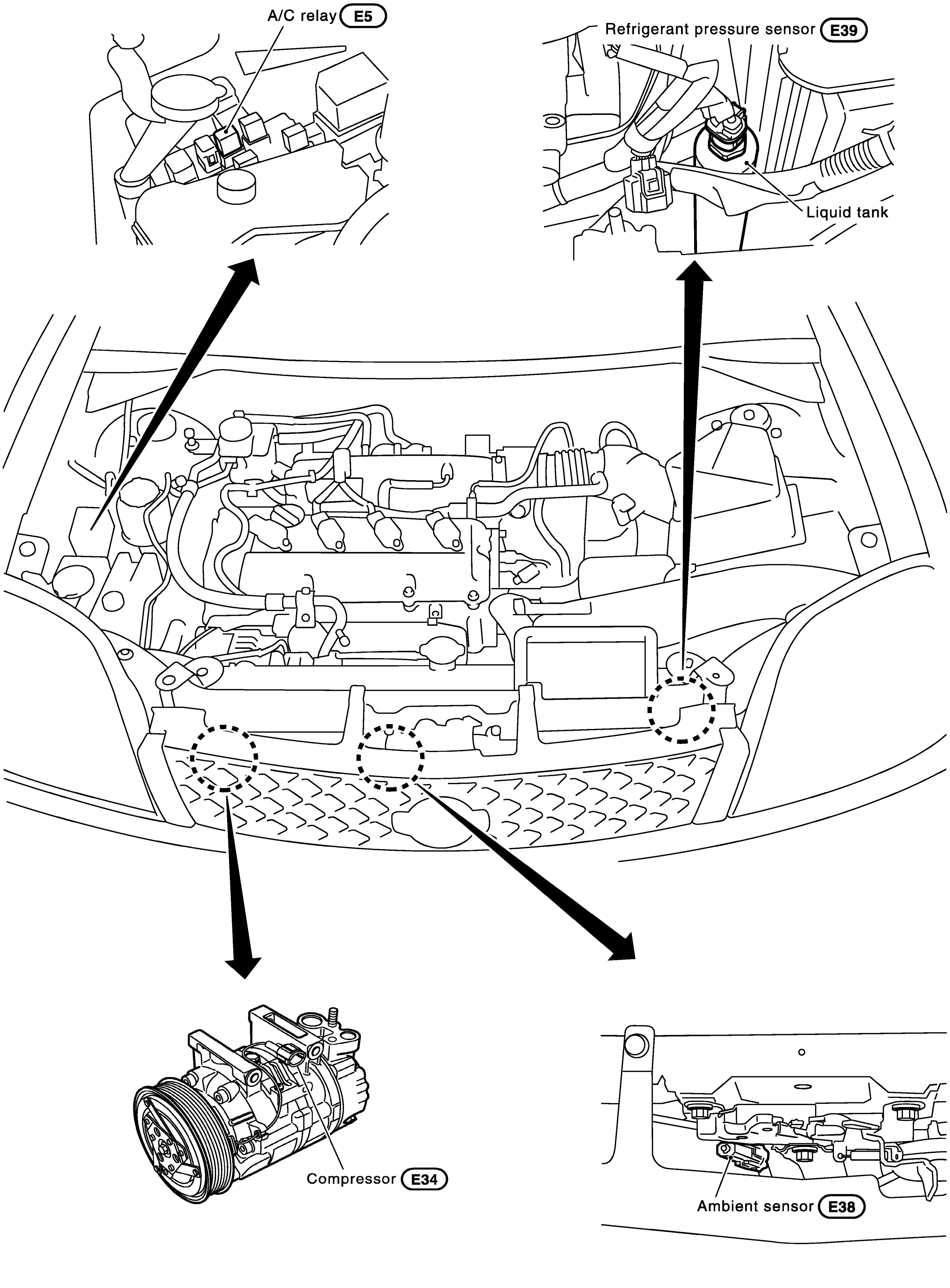

RJIA3094E

PASSENGER COMPARTMENT

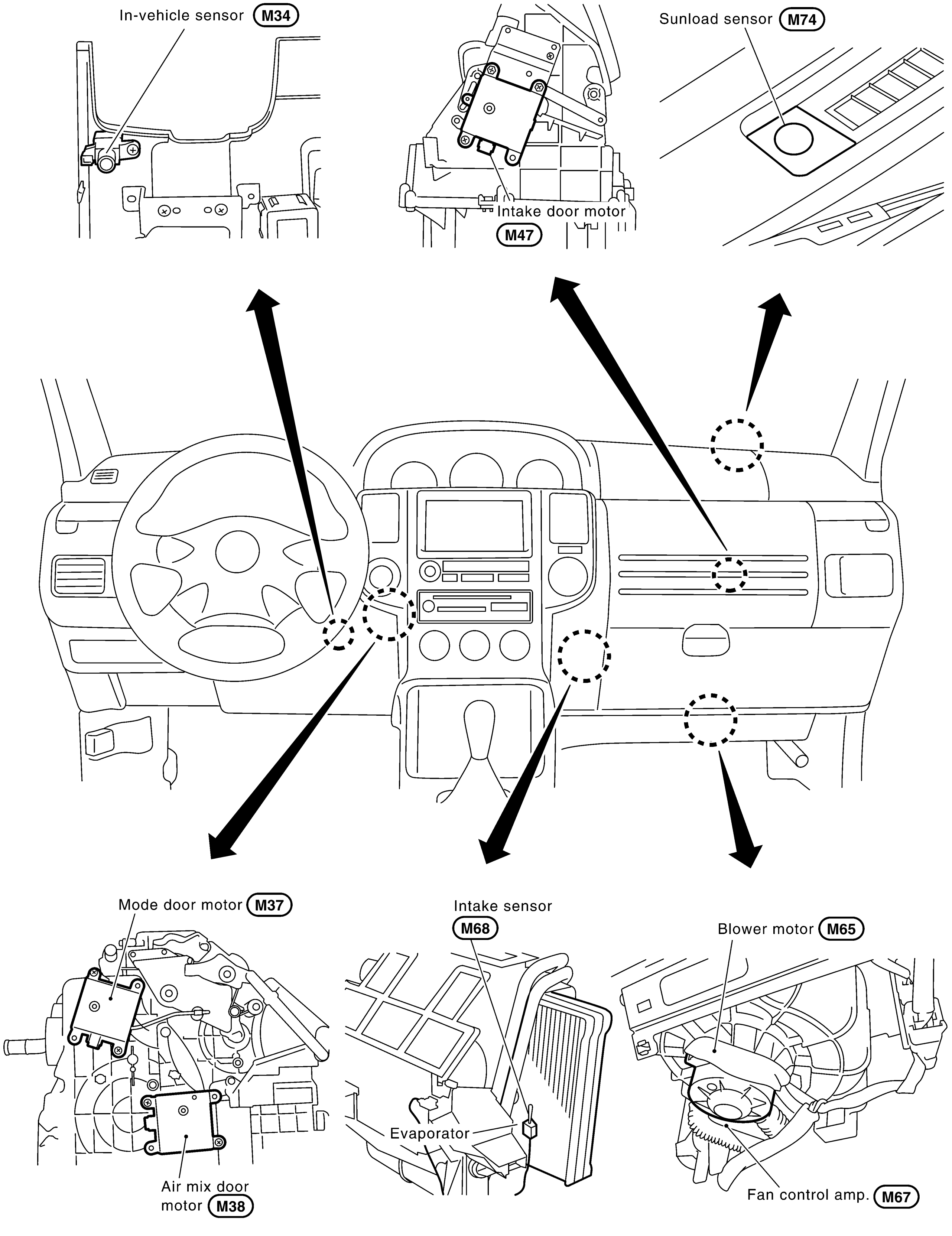

Schematic — A/C, A —

AJS001KI

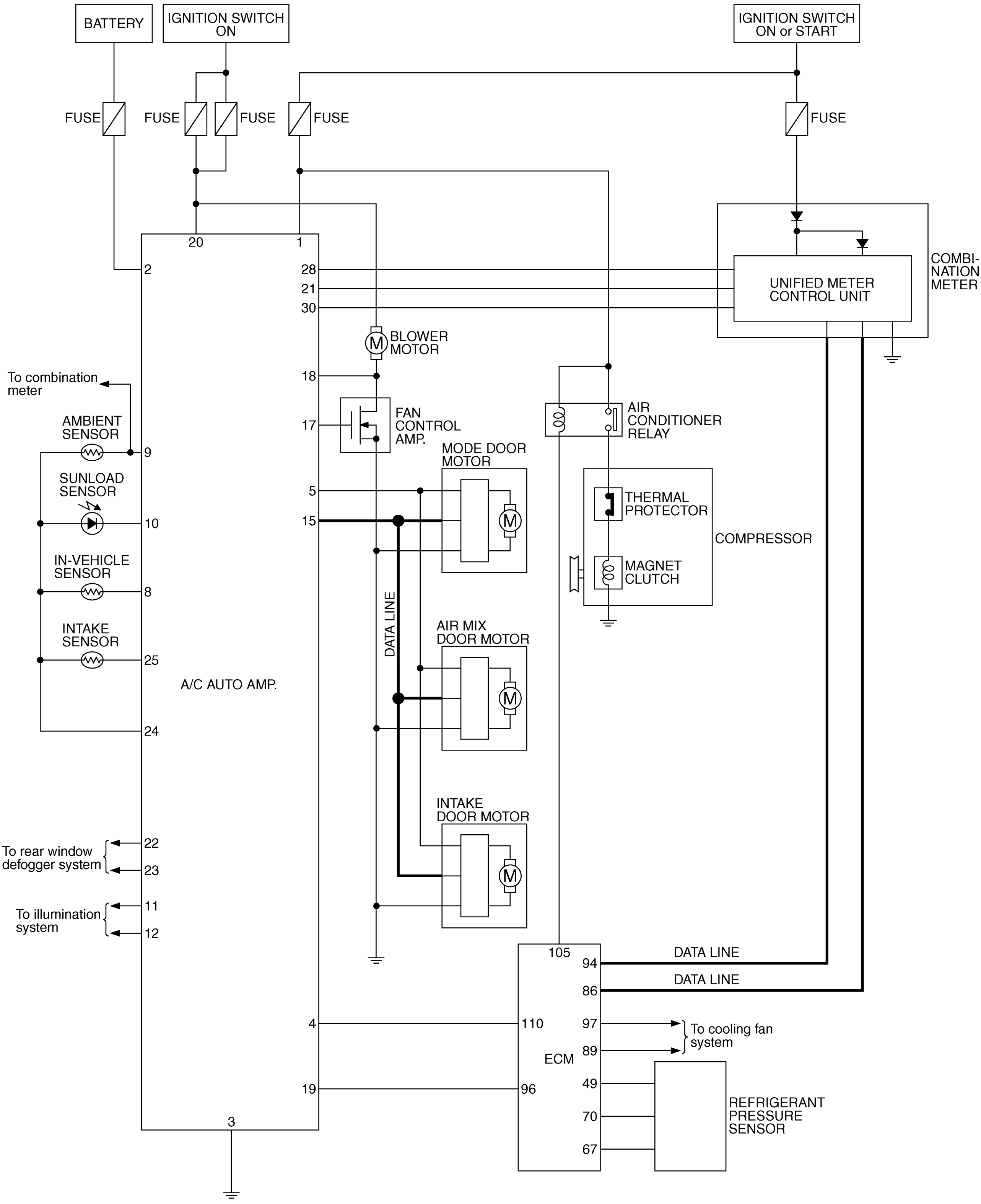

TJWB0036E

Wiring Diagram — A/C, A —

AJS001O6

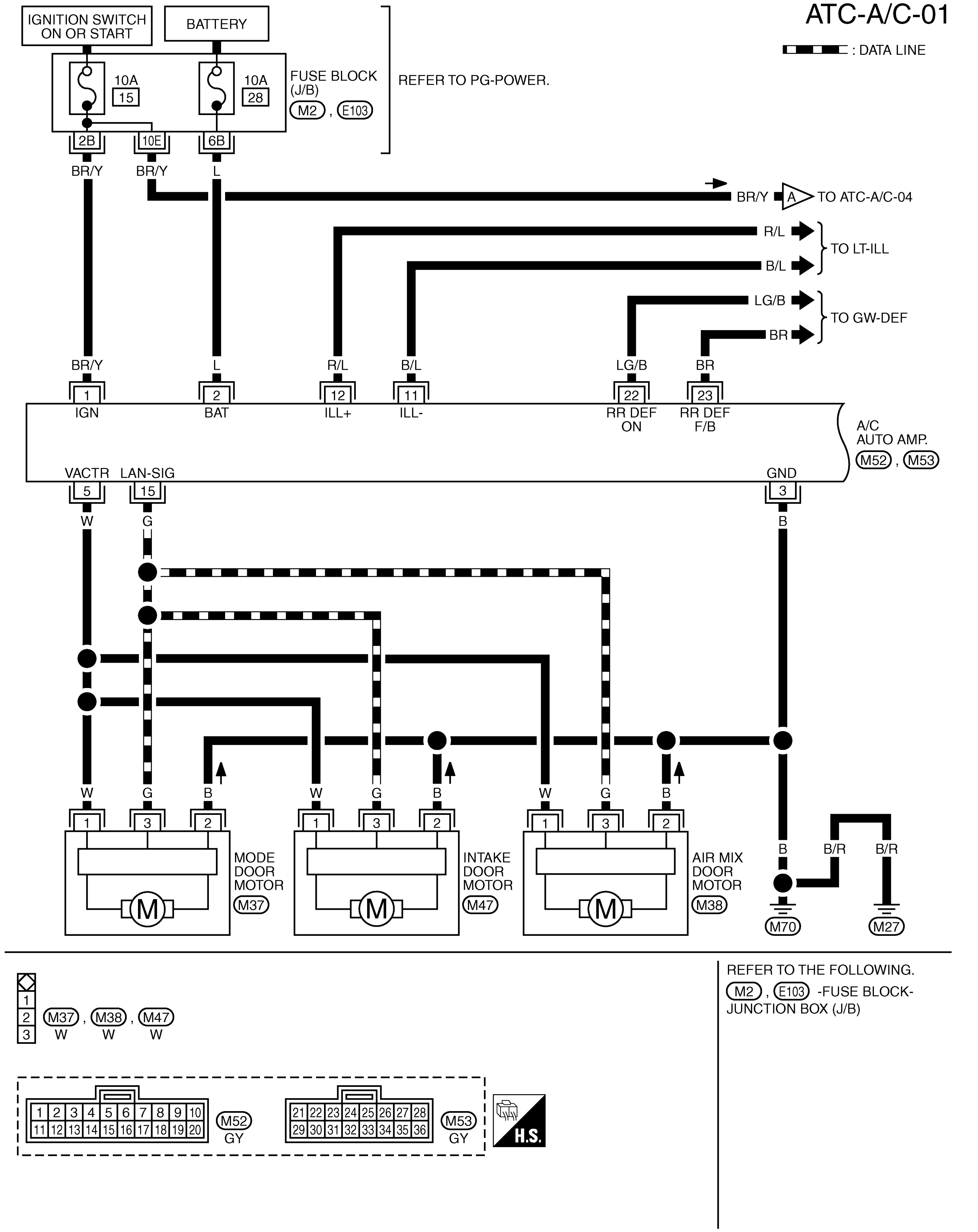

TJWB0163E

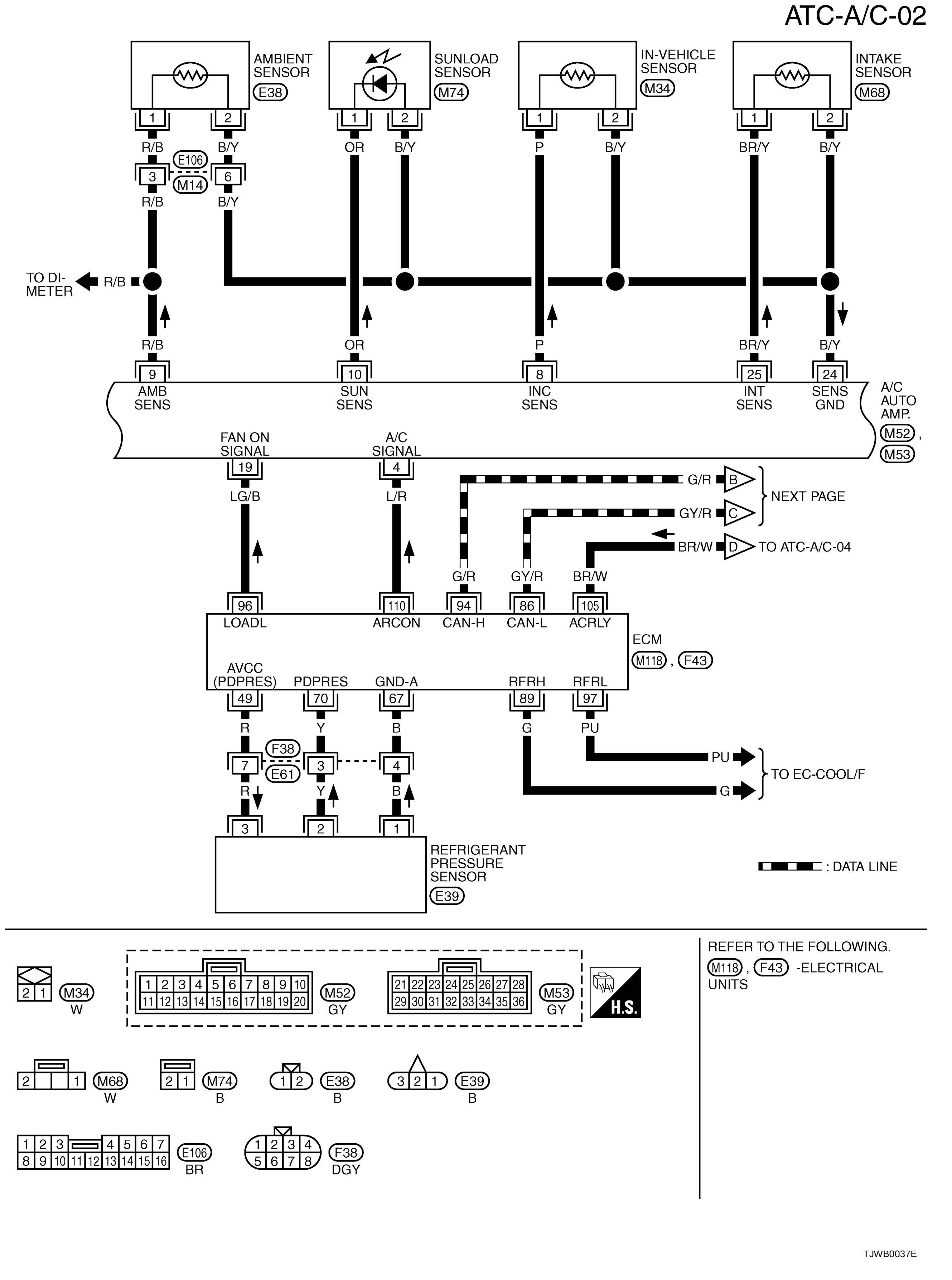
ATC-A/C-02
AMBIENT SENSOR E38
SUNLOAD SENSOR M74
IN-VEHICLE SENSOR M34
INTAKE SENSOR M68
R/B
B/Y
OR
P
BR/Y
E106
M14
TO DI-METER
AMB SENS
SUN SENS
INC SENS
INT SENS
SENS GND
A/C AUTO AMP. M52, M53
FAN ON SIGNAL
A/C SIGNAL
LG/B
L/R
G/R
GY/R
BR/W
NEXT PAGE
TO ATC-A/C-04
LOADL
ARCON
CAN-H
CAN-L
ACRLY
ECM M118, F43
AVCC (PDPRES)
PDPRES
GND-A
RFRH
RFRL
R
Y
B
G
PU
F38
E61
TO EC-COOL/F
REFRIGERANT PRESSURE SENSOR E39
: DATA LINE
M34 W
M52 GY
M53 GY
H.S.
M68 W
M74 B
E38 B
E39 B
E106 BR
F38 DGY
REFER TO THE FOLLOWING.
M118, F43 -ELECTRICAL UNITS
TJWB0037E

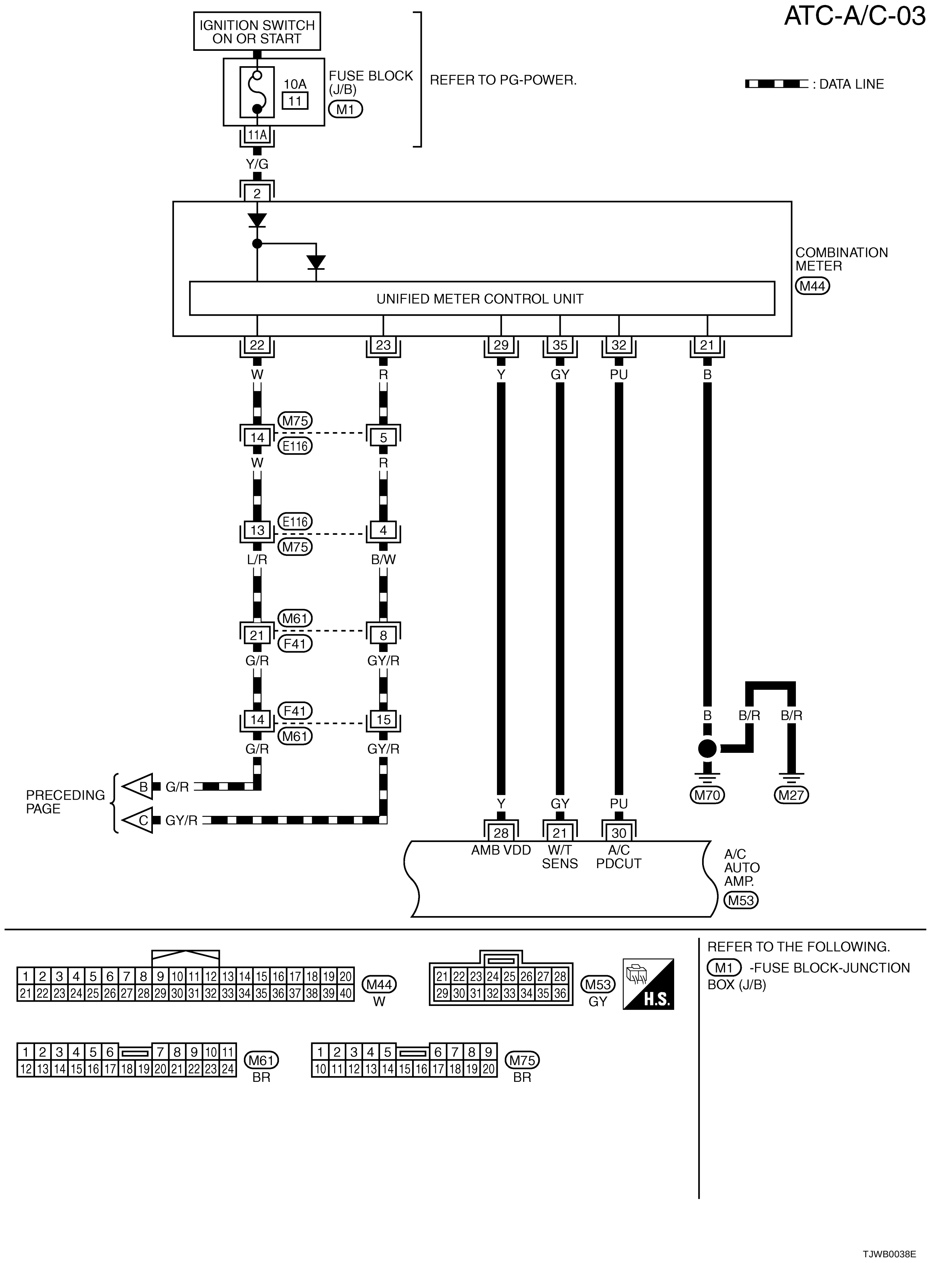
ATC-A/C-03
IGNITION SWITCH ON OR START
10A
11
FUSE BLOCK (J/B)
M1
REFER TO PG-POWER.
: DATA LINE
11A
Y/G
2
COMBINATION METER
M44
UNIFIED METER CONTROL UNIT
22
23
29
35
32
21
W
R
Y
GY
PU
B
M75
E116
14
5
13
4
L/R
B/W
M61
F41
21
8
G/R
GY/R
15
B/R
M70
M27
PRECEDING PAGE
B
C
28
AMB VDD
W/T SENS
30
A/C PDCUT
A/C AUTO AMP.
M53
H.S.
REFER TO THE FOLLOWING.
M1 -FUSE BLOCK-JUNCTION BOX (J/B)
BR
TJWB0038E

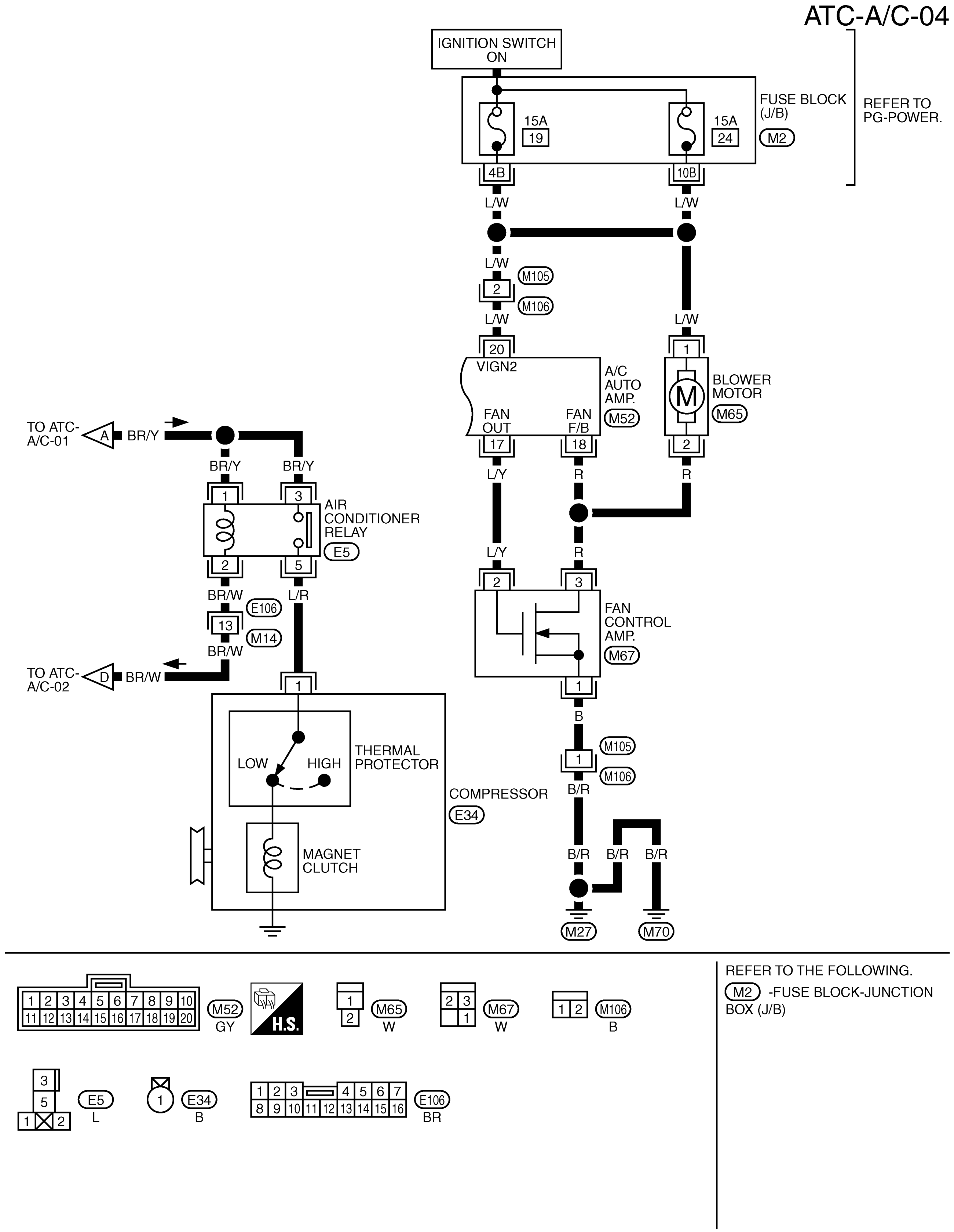
ATC-A/C-04
IGNITION SWITCH ON
FUSE BLOCK (J/B)
M2
REFER TO PG-POWER.
15A
19
15A
24
4B
10B
L/W
M105
M106
2
20
VIGN2
A/C AUTO AMP.
M52
FAN OUT
FAN F/B
17
18
L/Y
R
1
BLOWER MOTOR
M65
TO ATC-A/C-01
A
BR/Y
AIR CONDITIONER RELAY
E5
3
5
BR/W
L/R
E106
13
M14
TO ATC-A/C-02
D
FAN CONTROL AMP.
M67
B
B/R
THERMAL PROTECTOR
LOW
HIGH
COMPRESSOR
E34
MAGNET CLUTCH
M27
M70
GY
H.S.
W
L
BR
REFER TO THE FOLLOWING.
M2 -FUSE BLOCK-JUNCTION BOX (J/B)
TJWB0045E

Auto Amp. Terminals and Reference Value

AJS001KK

Measure voltage between each terminal and ground by following terminals and reference value for auto amp.

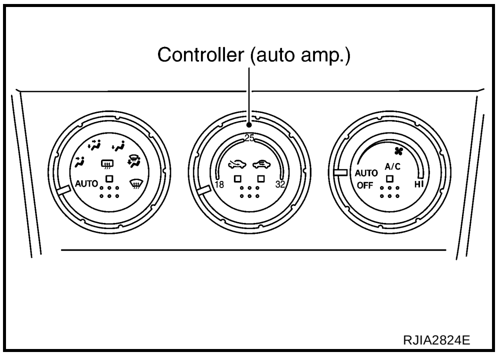

PIN CONNECTOR TERMINAL LAYOUT

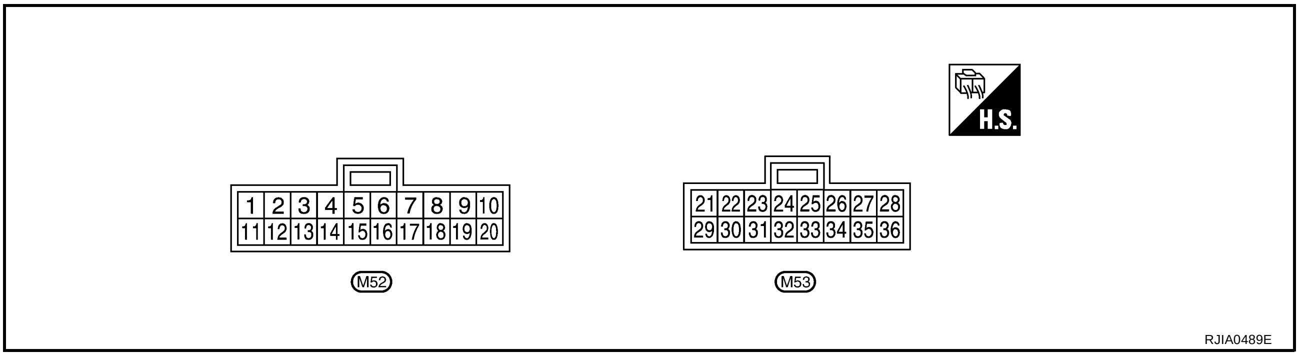

TERMINALS AND REFERENCE VALUE FOR AUTO AMP.

Terminal No.	Wire color	Item	Ignition switch	Condition	Voltage (V)
1	BR/Y	Power supply for IGN	ON	-	Battery voltage
2	L	Power supply for BAT	OFF	-	Battery voltage
3	B	Ground	ON	-	Approx. 0
4	L/R	Compressor (A/C) ON signal	ON	A/C switch (Compressor): ON	Approx. 0
				A/C switch (Compressor): OFF	Approx. 5
5	W	Power supply for each door motor	ON	-	Battery voltage
8	P	In-vehicle sensor	-	-	-
9	R/B	Ambient sensor	-	-	-
10	OR	Sunload sensor	-	-	-
11	B/L	Illumination ground	ON	Light switch: ON	Approx. 0
12	R/L	Power supply for illumination	ON	Light switch: ON	Approx. 12
15	G	LAN signal	ON	-	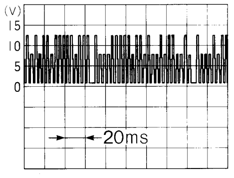 HAK0652D
17	L/Y	Fan control amp. control signal	ON	Blower fan speed: 1st - 24th	Approx. 2.5 - 3.5
				Blower fan speed: 25th	Approx. 9.0
18	R	Blower motor feedback	ON	Blower fan speed: 1st	Approx. 8.0
19	LG/B	Blower fan ON signal	ON	Blower fan: ON	Approx. 0
				Blower fan: OFF	Approx. 5
20	L/W	Power supply for IGN2	ON	-	Battery voltage

Terminal No.	Wire color	Item	Ignition switch	Condition	Voltage (V)
21	GY	Water temperature sensor	ON	At idle [after warming up, approx. 80°C (176°F)] **CAUTION:** **The waveforms vary depending on coolant temperature.**	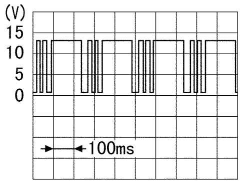 SKIA0056J
22	LG/B	Rear window defogger ON signal	ON	Rear window defogger: ON	Approx. 0
				Rear window defogger: OFF	Approx. 12
23	BR	Rear window defogger feedback signal	ON	Rear window defogger: ON	Approx. 12
				Rear window defogger: OFF	Approx. 0
24	B/Y	Sensor ground	ON	-	Approx. 0
25	BR/Y	Intake sensor	-	-	-
28	Y	Power supply for ambient temperature display	ON	-	Approx. 5
30	PU	Compressor feedback signal	ON	-	Approx. 0
				When refrigerant pressure sensor connector is disconnected	Approx. 5

Self-diagnosis Function

AJS001KL

DESCRIPTION

The self-diagnosis system diagnoses sensors, door motors, blower motor, etc. by system line.
Self-diagnosis consists of STEP-1 to 7. There are two ways of changing method during self-diagnosis.

- Switching to self-diagnosis STEP-1 to 4.
  Shifting from usual control to the self-diagnosis system is accomplished by starting the engine (turning the ignition switch from OFF to ON) and pressing A/C switch for at least 5 seconds. The A/C switch must be pressed within 10 seconds after starting the engine (ignition switch is turned ON). This system will be canceled by either pressing intake switch or turning the ignition switch OFF. Shifting from one step to another is accomplished by means of turning fan control dial, as required.
- Switching to self-diagnosis STEP-5 to 7 (Auxiliary mechanism).
  Shifting from usual control to the self-diagnosis system is accomplished by starting the engine (turning the ignition switch from OFF to ON) and pressing intake switch for at least 5 seconds. The intake switch must be pressed within 10 seconds after starting the engine (ignition switch is turned ON). This system will be canceled by either pressing A/C switch or turning the ignition switch OFF. Shifting from one step to another is accomplished by means of turning fan control dial, as required.

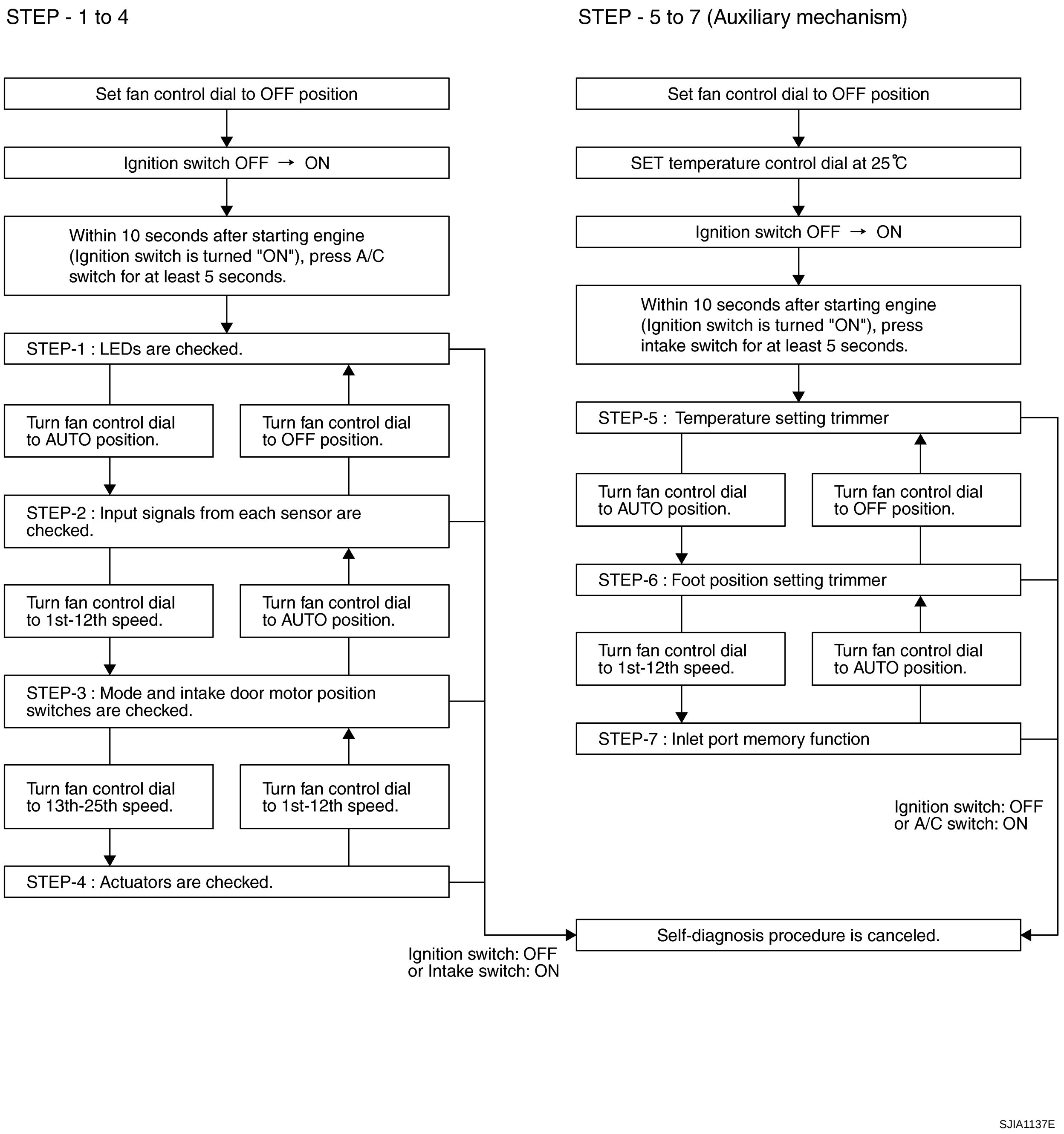
STEP - 1 to 4
Set fan control dial to OFF position
Ignition switch OFF → ON
Within 10 seconds after starting engine (Ignition switch is turned "ON"), press A/C switch for at least 5 seconds.
STEP-1 : LEDs are checked.
Turn fan control dial to AUTO position.
Turn fan control dial to OFF position.
STEP-2 : Input signals from each sensor are checked.
Turn fan control dial to 1st-12th speed.
Turn fan control dial to AUTO position.
STEP-3 : Mode and intake door motor position switches are checked.
Turn fan control dial to 13th-25th speed.
Turn fan control dial to 1st-12th speed.
STEP-4 : Actuators are checked.
Ignition switch: OFF
or Intake switch: ON
STEP - 5 to 7 (Auxiliary mechanism)
Set fan control dial to OFF position
SET temperature control dial at 25℃
Ignition switch OFF → ON
Within 10 seconds after starting engine (Ignition switch is turned "ON"), press intake switch for at least 5 seconds.
STEP-5 : Temperature setting trimmer
Turn fan control dial to AUTO position.
Turn fan control dial to OFF position.
STEP-6 : Foot position setting trimmer
Turn fan control dial to 1st-12th speed.
Turn fan control dial to AUTO position.
STEP-7 : Inlet port memory function
Ignition switch: OFF
or A/C switch: ON
Self-diagnosis procedure is canceled.
SJIA1137E

FUNCTION CONFIRMATION PROCEDURE

1. SET IN SELF-DIAGNOSIS MODE (STEP-1 TO 4)

1. Set the fan control dial to OFF position.
2. Turn ignition switch ON.
3. Set in self-diagnosis mode as follows. Within 10 seconds after starting engine (ignition switch is turned ON.), press A/C switch for at least 5 seconds.

   CAUTION:
   If battery voltage drops below 12 V during diagnosis STEP-3, door motor speed becomes slower and as a result, the system may generate an error even when operation is usual. To avoid this, start engine before performing this diagnosis.

>> GO TO 2.

2. STEP-1: LEDS ARE CHECKED

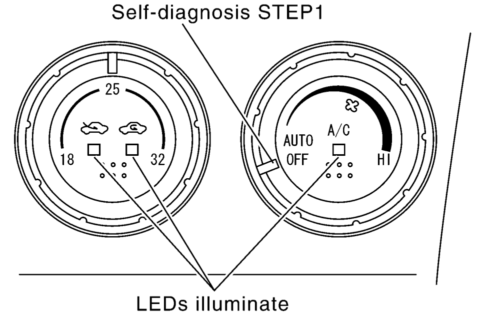

SJIA0389E

Check intake and A/C switch LEDs illumination.

OK >> GO TO 3.
NG >> Refer to ATC-87, "Self-diagnosis" .

3. CHECK TO ADVANCE SELF-DIAGNOSIS STEP-2

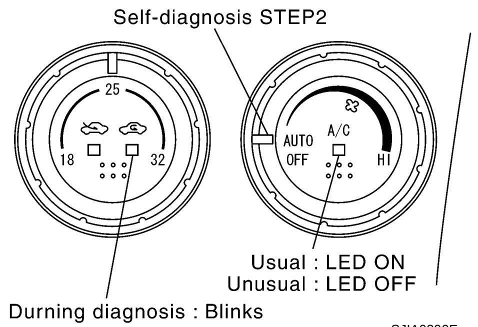

SJIA0390E

1. Turn fan control dial to AUTO position.

   CAUTION:
   When switched to STEP-2, LED of REC position blinks for approximately 25 seconds.
2. Advance to self-diagnosis STEP-2?

Check A/C switch LED illumination.

OK >> GO TO 4.
NG >> Replace controller. (Fan control dial is malfunctioning)

4. CHECK TO RETURN SELF-DIAGNOSIS STEP-1

Turn fan control dial to OFF position.

Return to self-diagnosis STEP-1?

YES >> GO TO 5.
NO >> Replace controller. (Fan control dial is malfunctioning)

5. STEP-2: SENSOR CIRCUITS ARE CHECKED FOR OPEN OR SHORT CIRCUIT

1. Turn fan control dial to AUTO position.
2. Turn mode control dial to AUTO position.

   CAUTION:
   When switched to STEP-2, LED of REC position blinks for approximately 25 seconds.
3. Check A/C switch LED is illuminate.

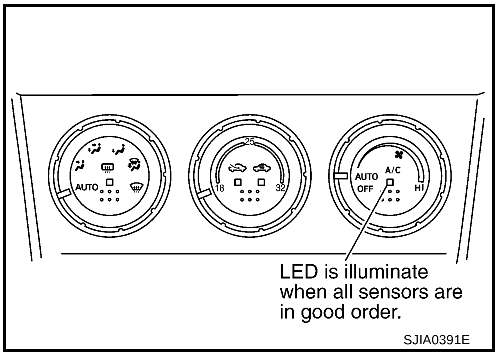

OK or NG

OK >> GO TO 6.
NG >> GO TO 9.

6. STEP-3: MODE DOOR AND INTAKE DOOR POSITIONS ARE CHECKED

1. Turn fan control dial to 1st–12th speed.

   CAUTION:
   When switched to STEP-3, LED of REC position blinks for approximately 50 seconds.
2. Check A/C switch LED is illuminate.

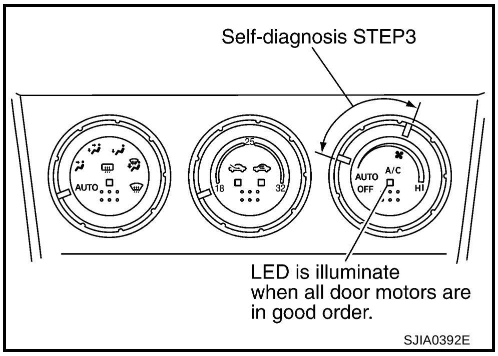

OK or NG

OK >> GO TO 7.
NG >> GO TO 10.

7. STEP-4: OPERATION OF EACH ACTUATOR IS CHECKED

1. Turn fan control dial to 13th–25th speed.
2. Change operation status of air conditioner by changing mode control dial position.

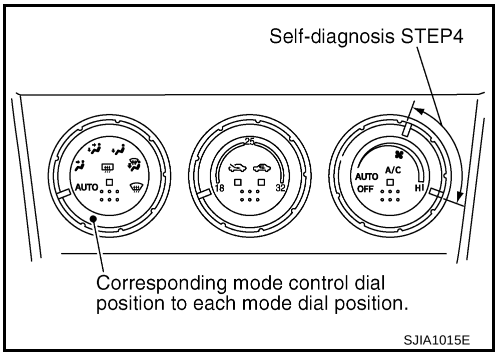

>> GO TO 8.

8. CHECK ACTUATORS

Refer to the following chart and confirm discharge air flow, air temperature, blower motor voltage and compressor operation.

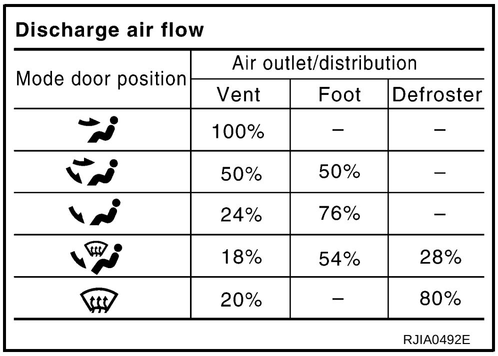

Discharge air flow

Mode door position	Air outlet/distribution		
	Vent	Foot	Defroster
	100%	–	–
	50%	50%	–
	24%	76%	–
	18%	54%	28%
	20%	–	80%

RJIA0492E

STEP No.*1	STEP-41	STEP-42	STEP-43	STEP-44	STEP-45	STEP-46
Mode control dial position	AUTO	VENT	B/L	FOOT or FOOT2	D/F or D/F2	DEF
Mode door position	VENT	VENT	B/L	FOOT*2	D/F	DEF
Intake door position	REC	REC	REC	FRE	FRE	FRE
Air mix door position	FULL COLD	FULL COLD	FULL COLD	FULL HOT	FULL HOT	FULL HOT
Blower motor voltage	Approx. 4.5 V	Approx. 10.5 V	Approx. 8.5 V	Approx. 8.5 V	Approx. 8.5 V	Approx. 12 V
Compressor	ON	ON	OFF	OFF	ON	ON

Checks must be made visually, by listening to any noise, or by touching air outlets with your hand, etc. for improper operation.
*1: STEP No. 41 to 46 are for differentiation and will not be displayed.
*2: FOOT position during automatic control. Refer to ATC-49, "AUXILIARY MECHANISM: FOOT POSITION SETTING TRIMMER" .

OK or NG

OK >> 1. Turn ignition switch OFF or intake switch ON.
2. INSPECTION END

NG >>
- Air outlet does not change.
  Go to Mode Door Motor Circuit. Refer to ATC-56, "Mode Door Motor Circuit" .
- Intake door does not change.
  Go to Intake Door Motor Circuit. Refer to ATC-62, "Intake Door Motor Circuit" .
- Blower motor operation is malfunctioning.
  Go to Blower Motor Circuit. Refer to ATC-65, "Blower Motor Circuit" .
- Magnet clutch does not engage.
  Go to Magnet Clutch Circuit. Refer to ATC-71, "Magnet Clutch Circuit" .
- Discharge air temperature does not change.
  Go to Air Mix Door Motor Circuit. Refer to ATC-59, "Air Mix Door Motor Circuit" .

9. CHECK MALFUNCTIONING SENSOR

Refer to the following chart.
*1: Perform self-diagnosis STEP-2 under sunshine.
When performing indoors, aim a light (more than 60 W) at sunload sensor, otherwise LED of A/C switch will not indicate despite that sunload sensor is functioning properly.

CAUTION:
When switched to STEP-2, LED of REC position blinks for approximately 25 seconds.

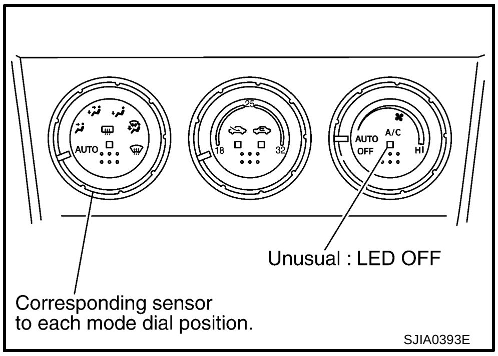

Mode control dial position	Unusual	Malfunctioning sensor (Including circuits)	Reference page
VENT	A/C LED: OFF	Ambient sensor	*2
B/L		In-vehicle sensor	*3
FOOT or FOOT2		Sunload sensor*1	*4
D/F or D/F2		Intake sensor	*5
DEF		Air mix door motor (LCU) PBR	*6

*2: ATC-88, "DIAGNOSIS PROCEDURE FOR AMBIENT SENSOR" .
*3: ATC-91, "DIAGNOSIS PROCEDURE FOR IN-VEHICLE SENSOR" .
*4: ATC-93, "DIAGNOSIS PROCEDURE FOR SUNLOAD SENSOR" .
*5: ATC-96, "DIAGNOSIS PROCEDURE FOR INTAKE SENSOR" .
*6: ATC-61, "DIAGNOSIS PROCEDURE FOR AIR MIX DOOR MOTOR PBR" .

>> INSPECTION END

10. CHECK MALFUNCTIONING DOOR MOTOR POSITION SWITCH

Mode and/or intake door motor PBR(s) is/are malfunctioning.

CAUTION:
When switched to STEP-3, LED of REC position blinks for approximately 50 seconds.

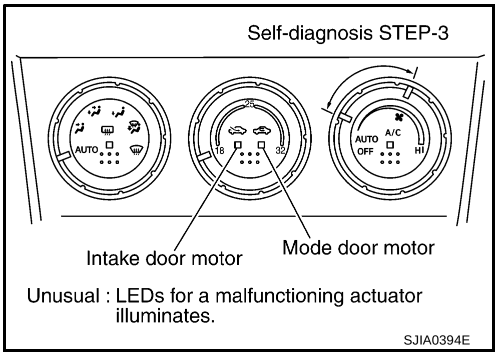

Unusual	Mode or intake door position	Reference page
REC LED: ON	Mode door motor	*1
FRE LED: ON	Intake door motor	*2

*1: ATC-58, "DIAGNOSIS PROCEDURE FOR MODE DOOR MOTOR" .
*2: ATC-64, "DIAGNOSIS PROCEDURE FOR INTAKE DOOR MOTOR" .

>> INSPECTION END

AUXILIARY MECHANISM: TEMPERATURE SETTING TRIMMER

The trimmer compensates for differences in range of ±3°C between temperature setting (Temperature control dial position) and temperature felt by driver.

Operating procedures for this trimmer are as follows:

1. Set temperature control dial at 25°C.
2. Set fan control dial to OFF.
3. Turn ignition switch ON.
4. Set in self-diagnosis mode as follows. Within 10 seconds after starting engine (ignition switch is turned ON.), press intake switch for at least 5 seconds.
5. Turn temperature control dial as desired. Temperature will change at a rate of 1°C each time a dial is turned.

Setting temperature	LED status of each switch		
	FRE	REC	A/C
–3°C	ON	ON	ON
–2°C	ON	ON	OFF
–1°C	ON	OFF	ON
0°C (Initial setting)	OFF	OFF	OFF
1°C	OFF	OFF	ON
2°C	OFF	ON	OFF
3°C	OFF	ON	ON

When battery cable is disconnected, trimmer operation is canceled. Temperature set becomes that of initial condition, i.e. 0°C.

AUXILIARY MECHANISM: FOOT POSITION SETTING TRIMMER

Wind distribution ratio in FOOT mode can be set.

Operating procedures for this trimmer are as follows:

1. Set temperature control dial at 25°C.
2. Set fan control dial to AUTO.
3. Turn ignition switch ON.
4. Set in self-diagnosis mode as follows. Within 10 seconds after starting engine (ignition switch is turned ON.), press intake switch for at least 5 seconds.
5. Turn temperature control dial as desired.

Type	Discharge air flow					
	Automatically controls the mode door			Manually controls the mode door		
	VENT	FOOT	DEF	VENT	FOOT	DEF
Type-A (initial setting)	24%	61%	15%	24%	76%	–
Type-B	24%	61%	15%	24%	61%	15%
Type-C	24%	76%	–	24%	61%	15%
Type-D	24%	76%	–	24%	76%	–

RJIA2825E

Type	LED status of each switch		
	FRE	REC	A/C
Type-A (initial setting)	OFF	OFF	ON
Type-B	OFF	ON	OFF
Type-C	OFF	ON	ON
Type-D	ON	OFF	OFF

AUXILIARY MECHANISM: INLET PORT MEMORY FUNCTION

When ignition switch is turned from OFF to ON, inlet port can be set to AUTO or manual.

Operating procedures for this trimmer are as follows:

1. Set fan control dial to 1st–25th speed.
2. Turn ignition switch ON.
3. Set in self-diagnosis mode as follows. Within 10 seconds after starting engine (ignition switch is turned ON.), press intake switch for at least 5 seconds.
4. Press intake switch as desired.

LED status of FRE position	LED status of REC position	Setting status		Setting changeover method
		FRE	REC	
OFF	OFF	AUTO control	AUTO control	Intake SW: ON
OFF	ON	AUTO control (Initial setting)	Manual REC status is memorized. (Initial setting)	
ON	OFF	Manual FRE status is memorized.	AUTO control	
ON	ON	Manual FRE status is memorized.	Manual REC status is memorized.	

Operational Check

AJS001KM

The purpose of the operational check is to confirm that the system operates properly.

Conditions : Engine running at usual operating temperature

CHECKING BLOWER

1. Turn fan control dial to 1st speed. Blower should operate on low speed.
2. Turn fan control dial to 2nd speed, and continue checking blower speed until all speeds are checked.
3. Leave blower on Max. speed.

If NG, go to trouble diagnosis procedure for ATC-65, "Blower Motor Circuit" .
If OK, continue the check.

CHECKING DISCHARGE AIR

1. Turn mode control dial to each position.
2. Confirm that discharge air comes out according to the air distribution table. Refer to ATC-30, "Discharge Air Flow" .

Intake door position is checked in the next step.
If NG, go to trouble diagnosis procedure for ATC-56, "Mode Door Motor Circuit" .
If OK, continue the check.

NOTE:
Confirm that the compressor clutch is engaged (sound or visual inspection) and intake door position is at FRESH when the D/F, D/F2 or DEF position is selected.

Discharge air flow

Mode door position	Air outlet/distribution		
	Vent	Foot	Defroster
	100%	–	–
	50%	50%	–
	24%	76%	–
	18%	54%	28%
	20%	–	80%

RJIA0492E

CHECKING INTAKE AIR

1. Press intake switch. Recirculation LED should illuminate.
2. Press intake switch again. Fresh LED should illuminate.
3. Listen for intake door position change (slight change of blower sound can be heard).

If NG, go to trouble diagnosis procedure for ATC-62, "Intake Door Motor Circuit" .
If OK, continue the check.

CHECKING TEMPERATURE DECREASE

1. Turn temperature control dial until 18°C.
2. Check for cold air at discharge air outlets.

If NG, go to trouble diagnosis procedure for ATC-77, "Insufficient Cooling" .
If OK, continue the check.

CHECKING TEMPERATURE INCREASE

1. Turn temperature control dial until 32°C.
2. Check for hot air at discharge air outlets.

If NG, go to trouble diagnosis procedure for ATC-85, "Insufficient Heating" .
If OK, continue the check.

CHECKING A/C SWITCH

1. Turn fan control dial to ON.
2. Press A/C switch.
   - Confirm that the compressor clutch engages (sound or visual inspection). (Discharge air and blower speed will depend on ambient, in-vehicle, and set temperatures.)

If NG, go to trouble diagnosis procedure for ATC-51, "Power Supply and Ground Circuit for Auto Amp." , then if necessary, trouble diagnosis procedure for ATC-71, "Magnet Clutch Circuit" .
If all operational checks are OK (symptom cannot be duplicated), go to Incident Simulation Tests in GI-26, "How to Perform Efficient Diagnosis for an Electrical Incident" and perform tests as outlined to simulate driving conditions environment. If symptom appears, refer to ATC-32, "SYMPTOM TABLE" and perform applicable trouble diagnosis procedures.

Power Supply and Ground Circuit for Auto Amp.

AJS001KN

SYMPTOM: A/C system does not come on.

INSPECTION FLOW

1. Confirm symptom by performing the following operational check.

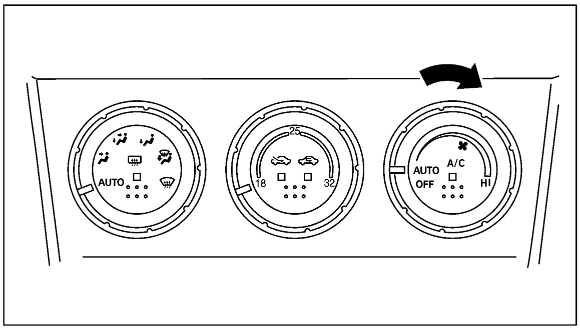

OPERATIONAL CHECK

a. Set fan control dial to AUTO position.
(Compressor is turned ON automatically.)
Confirm that the compressor clutch engages
(sound or visual inspection).
(blower speed will depend
on ambient, in-vehicle and set temperatures.)

If OK (symptom cannot be duplicated), perform complete operational check (*1).
If NG (symptom is confirmed), continue with STEP-2 following.

2. Check for any service bulletins. → 3. Check main power supply and ground circuit. (*2)

RJIA2826E

*1 ATC-50, "Operational Check"

*2 ATC-52, "DIAGNOSIS PROCEDURE FOR A/C SYSTEM"

COMPONENT DESCRIPTION

Auto Amp. (Automatic Amplifier)

The auto amp. has a built-in microcomputer which processes information sent from various sensors needed for air conditioner operation. The air mix door motor, mode door motor, intake door motor, blower motor and compressor are then controlled.
The auto amp. is unitized with control mechanisms. Signals from various switches and Potentio Temperature Control (PTC) are directly entered into auto amp.
Self-diagnosis functions are also built into auto amp. to provide quick check of malfunctions in the auto air conditioner system.

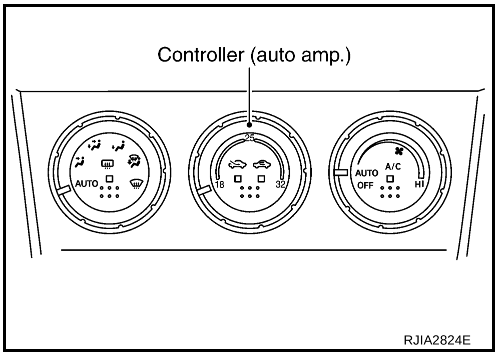

RJIA2824E

Potentio Temperature Control (PTC)

The PTC is built into the auto amp. It can be set at an interval of 1°C in the 18°C to 32°C temperature range by turning the temperature control dial.

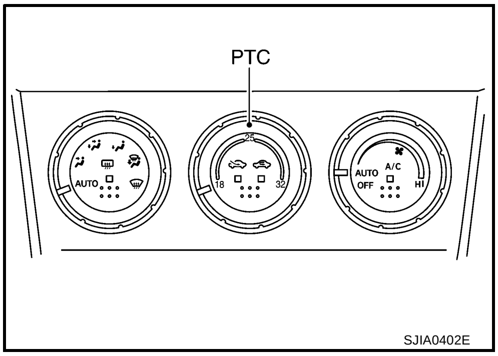

SJIA0402E

DIAGNOSIS PROCEDURE FOR A/C SYSTEM

SYMPTOM: A/C system does not come on.

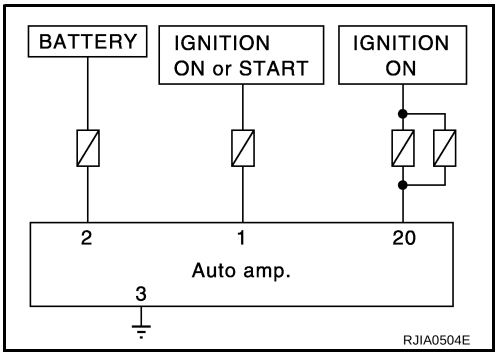

1. CHECK POWER SUPPLY CIRCUIT FOR AUTO AMP.

1. Disconnect auto amp. connector.
2. Check voltage between auto amp. harness connector M52 terminal 1, 2, 20 and ground.

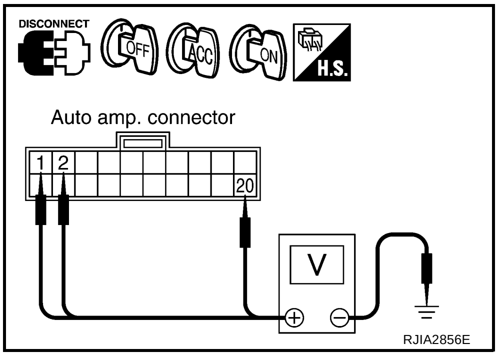

Terminals			Ignition switch position		
(+)		(−)	OFF	ACC	ON
Auto amp. connector	Terminal No.				
M52	1	Ground	Approx. 0 V	Approx. 0 V	Battery voltage
M52	2		Battery voltage	Battery voltage	Battery voltage
M52	20		Approx. 0 V	Approx. 0 V	Battery voltage

OK or NG

OK >> GO TO 2.

NG >> Check 10 A fuses (Nos. 15 and 28) and 15 A fuses (Nos. 19 and 24), located in the fuse block (J/B). Refer to PG-51, "FUSE BLOCK - JUNCTION BOX (J/B)" .

- If fuses are OK, check harness for open circuit. Repair or replace if necessary.
- If fuses are NG, replace fuse and check harness for short circuit. Repair or replace if necessary.

2. CHECK GROUND CIRCUIT FOR AUTO AMP.

1. Turn ignition switch OFF.
2. Check continuity between auto amp. harness connector M52 terminal 3 and ground.

3 – Ground : Continuity should exist.

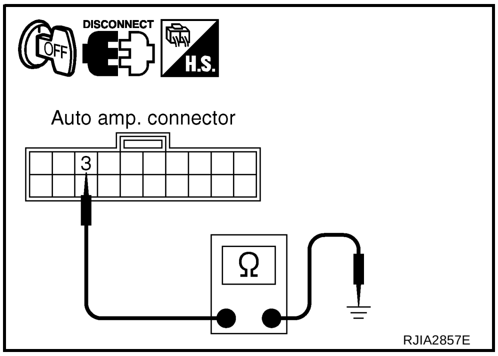

OK or NG

OK >> Replace auto amp.

NG >> Repair harness or connector.

LAN System Circuit

AJS001KO

SYMPTOM: Mode door motor, intake door motor and/or air mix door motor(s) does not operate normally.

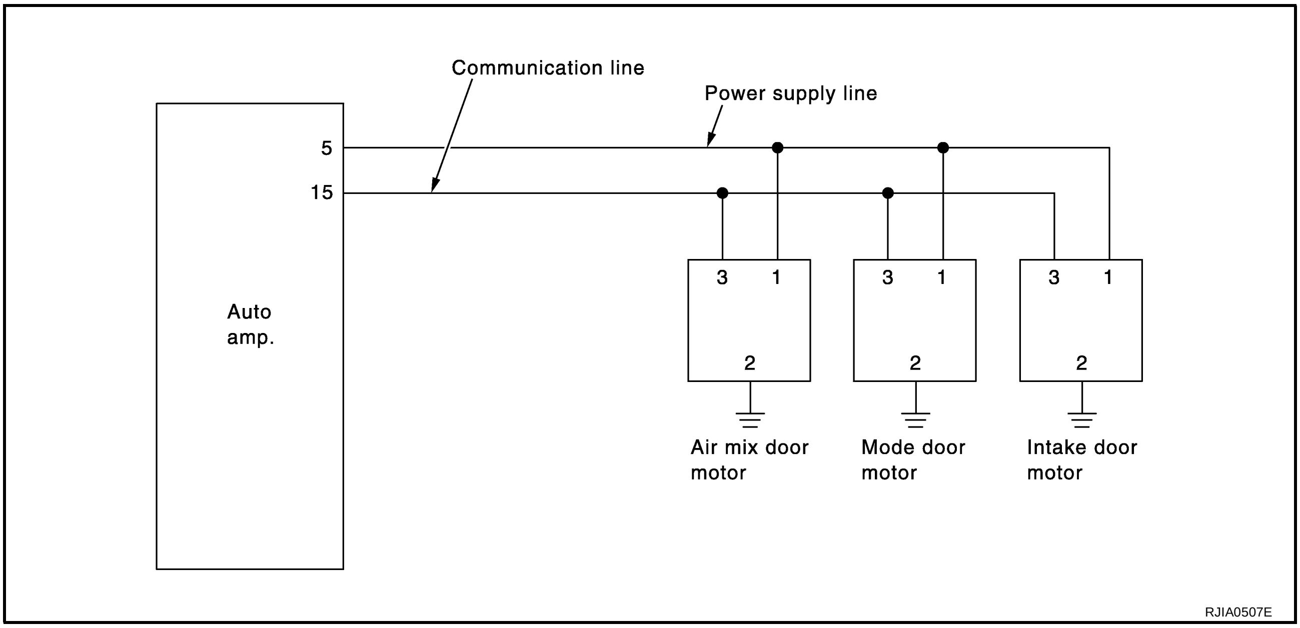

DIAGNOSIS PROCEDURE FOR LAN CIRCUIT

1. CHECK POWER SUPPLY FOR AUTO AMP.

1. Turn ignition switch ON.
2. Check voltage between auto amp. harness connector M52 terminal 5 and ground.

5 – Ground : Battery voltage

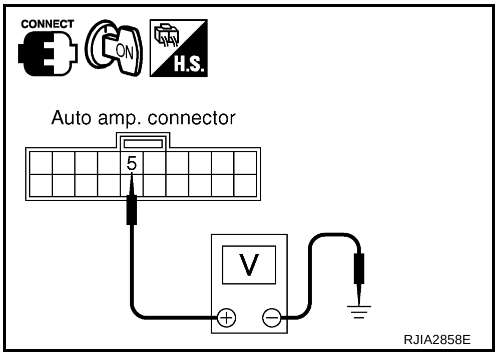

OK or NG

OK >> GO TO 2.
NG >> Replace auto amp.

2. CHECK SIGNAL FOR AUTO AMP.

Confirm A/C LAN signal between auto amp. harness connector M52 terminal 15 and ground using an oscilloscope.

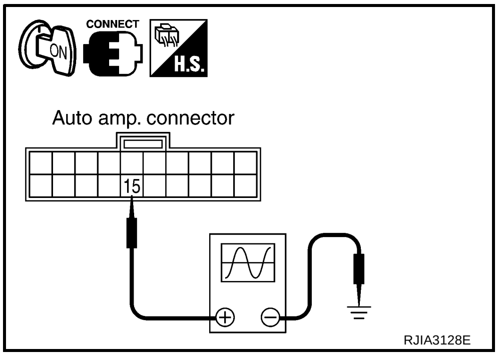

Terminals (+) Auto amp. connector	Terminals (+) Terminal No.	Terminals (–)	Voltage
M52	15	Ground	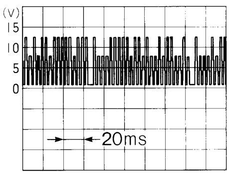 HAK0652D

OK or NG

OK >> GO TO 3.
NG >> Replace auto amp.

3. CHECK POWER SUPPLY FOR EACH DOOR MOTOR

Check voltage between each door motor harness connector and ground.

1 – Ground : Battery voltage

OK or NG

OK >> GO TO 4.
NG >> Repair harness or connector.

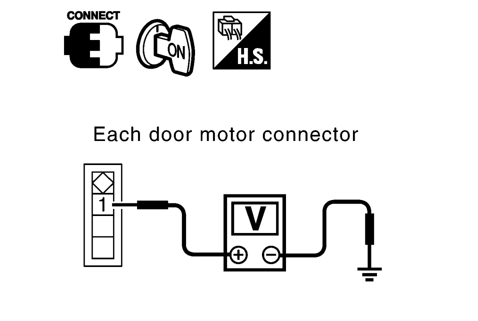

RJIA1988E

4. CHECK SIGNAL FOR EACH DOOR MOTOR

Confirm A/C LAN signal between each door motor harness connector and ground using an oscilloscope.

Terminals			Voltage
(+)		(–)	
Door motor connector	Terminal No.		
Mode door : M37	3	Ground	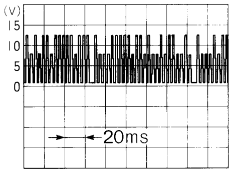 HAK0652D
Air mix door : M38	3		
Intake door : M47	3		

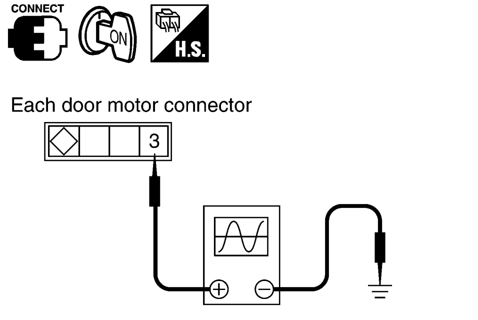

RJIA1989E

OK or NG

OK >> GO TO 5.
NG >> Repair harness or connector.

5. CHECK MOTOR GROUND CIRCUIT

1. Turn ignition switch OFF.
2. Disconnect each door motor connector.
3. Check continuity between each door motor harness connector and ground.

2 – Ground : Continuity should exist.

OK or NG

OK >> GO TO 6.
NG >> Repair harness or connector.

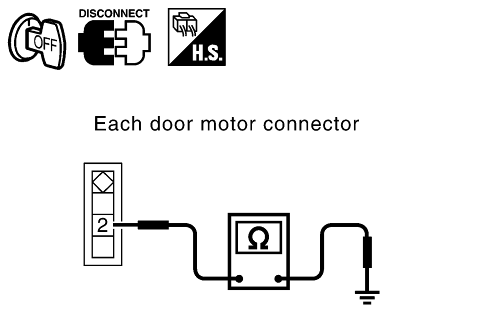

RJIA1990E

6. CHECK MOTOR OPERATION

1. Turn ignition switch OFF.
2. Disconnect each door motor connector.
3. Reconnect each door motor connector.
4. Turn ignition switch ON.
5. Confirm each door motor operation.

OK or NG

OK >> (Return to operate normally.)
- Poor contact in motor connector.

NG >> (Does not operate normally.)
- GO TO 7.

7. CHECK AIR MIX DOOR MOTOR AND INTAKE DOOR MOTOR OPERATION

1. Turn ignition switch OFF.
2. Disconnect mode, air mix, and intake door motor connectors.
3. Reconnect air mix and intake door motor connectors.
4. Turn ignition switch ON.
5. Confirm air mix door motor and intake door motor operation.

OK or NG

OK >> (Air mix and intake door motors operate normally.)
- Replace mode door motor.

NG >> (Air mix and intake door motors does not operate normally.)
- GO TO 8.

8. CHECK MODE DOOR MOTOR AND INTAKE DOOR MOTOR OPERATION

1. Turn ignition switch OFF.
2. Disconnect air mix door motor connector.
3. Reconnect mode door motor connector.
4. Turn ignition switch ON.
5. Confirm mode door motor and intake door motor operation.

OK or NG

OK >> (Mode and intake door motors operate normally.)
- Replace air mix door motor.

NG >> (Mode and intake door motors does not operate normally.)
- GO TO 9.

9. CHECK MODE DOOR MOTOR AND AIR MIX DOOR MOTOR OPERATION

1. Turn ignition switch OFF.
2. Disconnect intake door motor connector.
3. Reconnect air mix door motor connector.
4. Turn ignition switch ON.
5. Confirm mode door motor and air mix door motor operation.

OK or NG

OK >> (Mode and air mix door motors operate normally.)
- Replace intake door motor.

NG >> (Mode and air mix door motors does not operate normally.)
- Replace auto amp.

Mode Door Motor Circuit

AJS001KP

SYMPTOM:

- Air outlet does not change.
- Mode door motor does not operate normally.

INSPECTION FLOW

1. Confirm symptom by performing the following operational check.

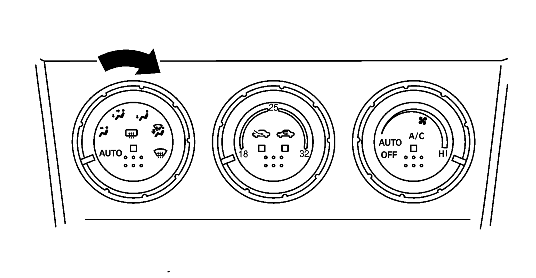

OPERATIONAL CHECK – Discharge air

a. Turn mode control dial to each position.

Discharge air flow

Mode door position	Air outlet/distribution		
	Vent	Foot	Defroster
	100%	–	–
	50%	50%	–
	24%	76%	–
	18%	54%	28%
	20%	–	80%

b. Confirm that discharge air comes out according to the air distribution table at left.
Refer to "Discharge AIr Flow" (*1).

NOTE:

- **If OK (symptom cannot be duplicated), perform complete operational check (*2).**
  If NG (symptom is confirmed), continue with STEP-2 following.
- **Confirm that the compressor clutch is engaged (sound or visual inspection) and intake door position is at FRESH when DEF, D/F or D/F2 is selected.**
  Intake door position is checked in the next step.

2. Check for any service bulletins. → 3. Perform self-diagnosis STEP-1. (*3)

3. → OK → 4. Perform self-diagnosis STEP-2. (*4)
   → NG → Go to appropriate malfunctioning sensor circuit. (*10)

4. OK → 5. Perform self-diagnosis STEP-3. (*4)

5. NG → Go to DIAGNOSTIC PROCEDURE FOR LAN SYSTEM CIRCUIT. (*11)
   OK → 6. Perform self-diagnosis STEP-4. (*4)

6. NG → Check mode door control linkage. (*12) → NG → Replace mode door motor.
   OK **[Cause cannot be confirmed by self-diagnosis.]** → 7. Check ambient sensor circuit. (*5)

7. OK → 8. Check in-vehicle sensor circuit. (*6)

8. OK → 9. Check sunload sensor circuit. (*7)

9. OK → 10. Check intake sensor circuit. (*8)

10. OK → 11. Check air mix door motor circuit. (*9)

11. OK → If the symptom still exists, perform a complete operational check (*2) and check for other symptoms. [Refer to symptom table, (*13).] Does another symptom exist?
    - YES → Go to Trouble Diagnosis for related symptoms. **[Another symptom exists.]**
    - NO → Replace auto amp. → INSPECTION END

RJIA3095E

*1	ATC-30, "Discharge Air Flow"	*2	ATC-50, "Operational Check"	*3	ATC-44, "FUNCTION CONFIRMATION PROCEDURE", see No. 1.
*4	ATC-44, "FUNCTION CONFIRMATION PROCEDURE", see No. 5 to 7.	*5	ATC-88, "Ambient Sensor Circuit"	*6	ATC-90, "In-vehicle Sensor Circuit"
*7	ATC-93, "Sunload Sensor Circuit"	*8	ATC-96, "Intake Sensor Circuit"	*9	ATC-59, "Air Mix Door Motor Circuit"

*10 ATC-44, "FUNCTION CONFIRMATION PROCEDURE", see No. 9.
*11 ATC-53, "DIAGNOSIS PROCEDURE FOR LAN CIRCUIT"
*12 ATC-112, "MODE DOOR MOTOR"
*13 ATC-32, "SYMPTOM TABLE"

SYSTEM DESCRIPTION

Component Parts

Mode door control system components are:

- Auto amp.
- Mode door motor (LCU)
- A/C LAN system (PBR built-in air mix door motor, mode door motor and intake door motor)
- In-vehicle sensor
- Ambient sensor
- Sunload sensor
- Intake sensor

System Operation

The auto amp. receives data from each of the sensors. The auto amp. sends air mix door, mode door and intake door opening angle data to the air mix door motor LCU, mode door motor LCU and intake door motor LCU.
The air mix door motor, mode door motor and intake door motor read their respective signals according to the address signal. Opening angle indication signals received from the auto amp. and each of the motor position sensors are compared by the LCUs in each door motor with the existing decision and opening angles. Subsequently, HOT/COLD, DEF/VENT and FRESH/RECIRCULATION operation is selected. The new selection data is returned to the auto amp.

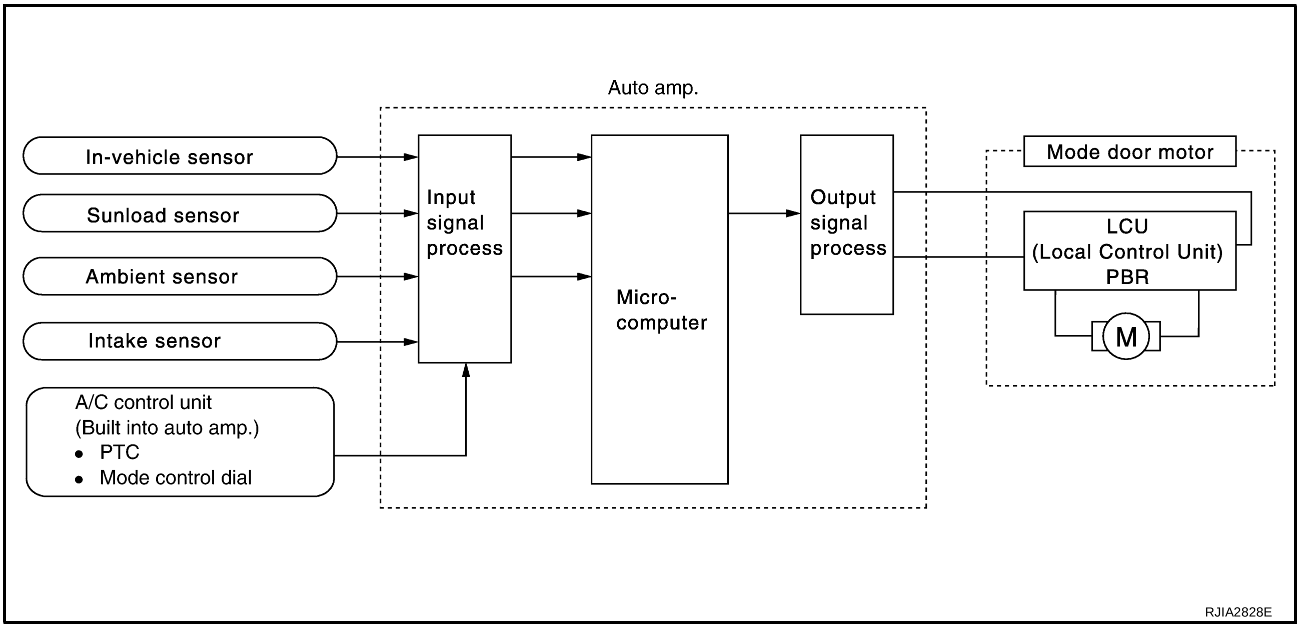

Mode Door Control Specification

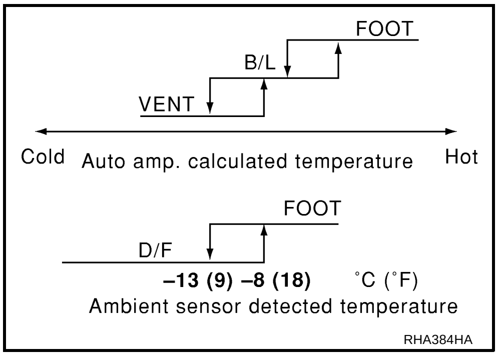

COMPONENT DESCRIPTION

Mode Door Motor

The mode door motor is attached to the heater & cooling unit assembly. It rotates so that air is discharged from the outlet set by the auto amp. Motor rotation is conveyed to a link which activates the mode door.

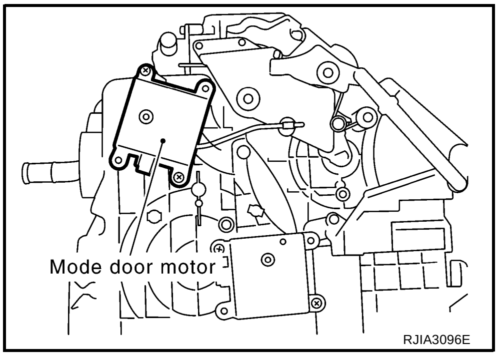

DIAGNOSIS PROCEDURE FOR MODE DOOR MOTOR

SYMPTOM: Mode door motor does not operate normally.
Perform diagnosis procedure. Refer to ATC-53, "DIAGNOSIS PROCEDURE FOR LAN CIRCUIT" .

Air Mix Door Motor Circuit

AJS001KQ

SYMPTOM:

- Discharge air temperature does not change.
- Air mix door motor does not operate.

INSPECTION FLOW

1. Confirm symptom by performing the following operational check.

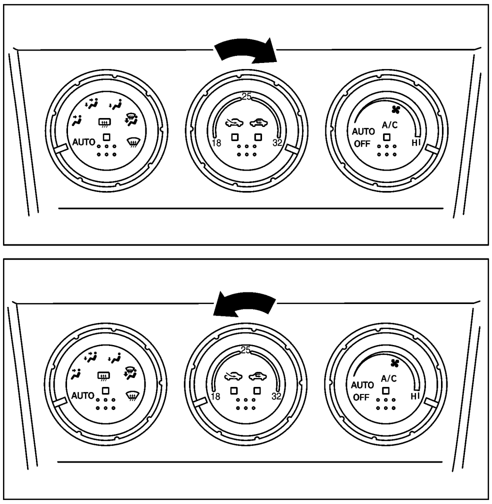

OPERATIONAL CHECK

Temperature increase

a. Turn temperature control dial clockwise until 32°C.
b. Check for hot air at discharge air outlets.

Temperature decrease

a. Turn temperature control dial counterclockwise until 18°C.
b. Check for cold air at discharge air outlets.

If OK (symptom cannot be duplicated), perform complete operational check (*1).
If NG (symptom is confirmed), continue with STEP-2 following.

2. Check for any service bulletins. → 3. Perform self-diagnosis STEP-1. (*2)

OK ↓

4. Perform self-diagnosis STEP-2. (*3) — NG → Go to appropriate malfunctioning sensor circuit. (*10)

OK ↓

5. Perform self-diagnosis STEP-4. (*3) — NG → Check air mix door motor. (*12)

- Check air mix door motor. (*12) — OK → Go to LAN system circuit. (*11)
- Check air mix door motor. (*12) — NG → Replace air mix door motor.

OK ↓ **[Cause cannot be confirmed by self-diagnosis.]**

6. Check ambient sensor circuit. (*4)

OK ↓

7. Check in-vehicle sensor circuit. (*5)

OK ↓

8. Check sunload sensor circuit. (*6)

OK ↓

9. Check intake sensor circuit. (*7)

OK ↓

10. Check air mix door motor circuit. (*8)

OK ↓

If the symptom still exists, perform a complete operational check (*1) and check for other symptoms. [Refer to symptom table, (*9).] Does another symptom exist?

- YES → Go to Trouble Diagnosis for related symptom. **Another symptom exists.**
- NO → Replace auto amp. → INSPECTION END

RJIA3097E

*1	ATC-50, "Operational Check"	*2	ATC-44, "FUNCTION CONFIRMATION PROCEDURE", see No. 1.	*3	ATC-44, "FUNCTION CONFIRMATION PROCEDURE", see No. 5 to 7.
*4	ATC-88, "Ambient Sensor Circuit"	*5	ATC-90, "In-vehicle Sensor Circuit"	*6	ATC-93, "Sunload Sensor Circuit"
*7	ATC-96, "Intake Sensor Circuit"	*8	ATC-61, "DIAGNOSIS PROCEDURE FOR AIR MIX DOOR MOTOR"	*9	ATC-32, "SYMPTOM TABLE"
*10	ATC-44, "FUNCTION CONFIRMATION PROCEDURE", see No. 9.	*11	ATC-53, "LAN System Circuit"	*12	ATC-113, "AIR MIX DOOR MOTOR"

SYSTEM DESCRIPTION

Component Parts

Air mix door control system components are:

- Auto amp.
- Air mix door motor (LCU)
- A/C LAN system (PBR built-in air mix door motor, mode door motor and intake door motor)
- In-vehicle sensor
- Ambient sensor
- Sunload sensor
- Intake sensor

System Operation

The auto amp. receives data from each of the sensors. The auto amp. sends air mix door, mode door and intake door opening angle data to the air mix door motor LCU, mode door motor LCU and intake door motor LCU.
The air mix door motor, mode door motor and intake door motor read their respective signals according to the address signal. Opening angle indication signals received from the auto amp. and each of the motor position sensors are compared by the LCUs in each door motor with the existing decision and opening angles. Subsequently, HOT/COLD, DEF/VENT and FRESH/RECIRCULATION operation is selected. The new selection data is returned to the auto amp.

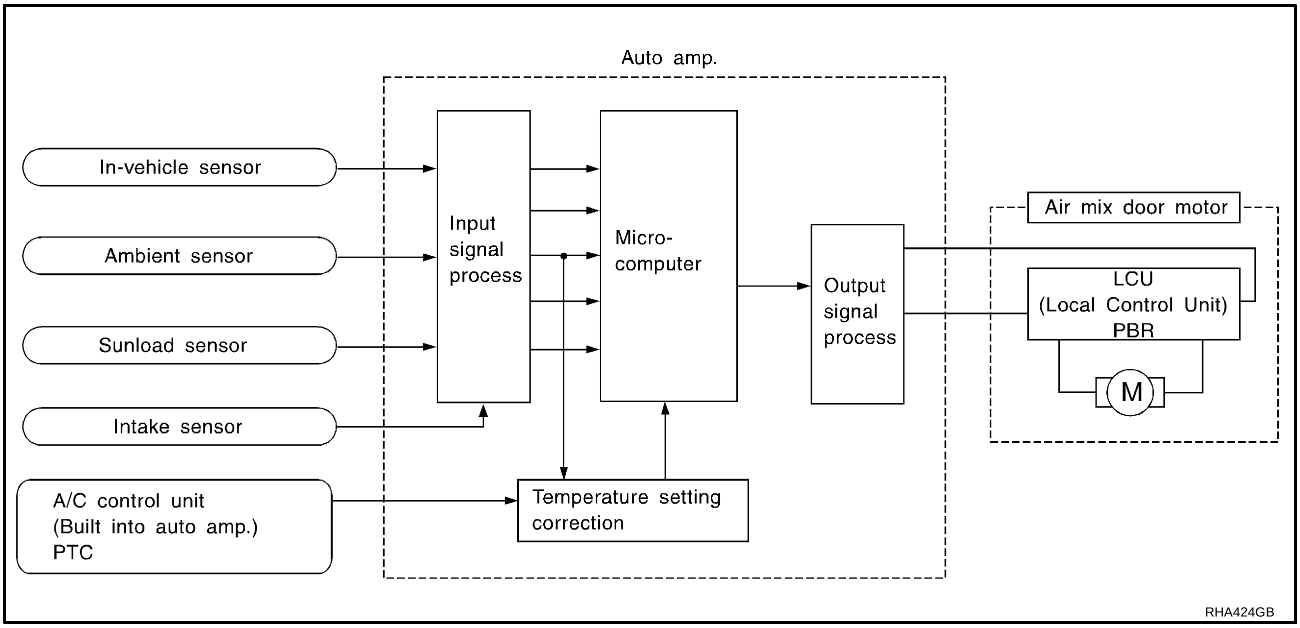

Air Mix Door Control Specification

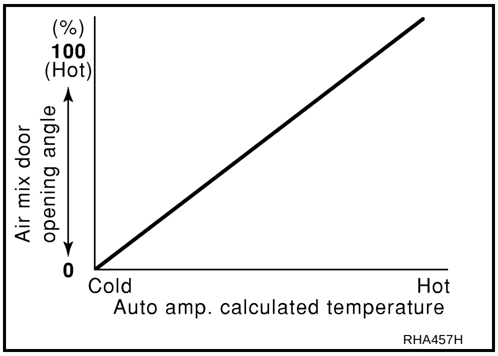

COMPONENT DESCRIPTION

Air Mix Door Motor

The air mix door motor is attached to the heater & cooling unit assembly. It rotates so that the air mix door is opened or closed to a position set by the auto amp. The air mix door position feedback is sent to the auto amp. by PBR built-in air mix door motor.

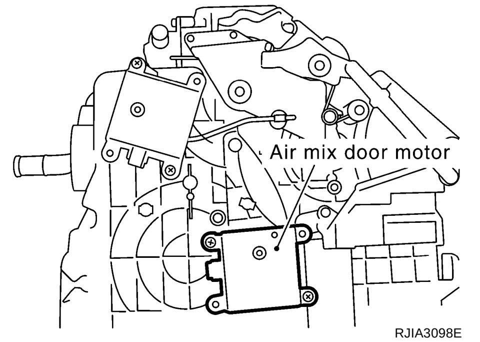

RJIA3098E

DIAGNOSIS PROCEDURE FOR AIR MIX DOOR MOTOR

SYMPTOM: Discharge air temperature does not change.
Perform diagnosis procedure. Refer to ATC-53, "DIAGNOSIS PROCEDURE FOR LAN CIRCUIT" .

Air Mix Door Motor PBR Circuit

AJS001WJ

SYMPTOM:

- Discharge air temperature does not change.
- PBR circuit is open or shorted.

DIAGNOSIS PROCEDURE FOR AIR MIX DOOR MOTOR PBR

Perform diagnosis procedure for ATC-53, "DIAGNOSIS PROCEDURE FOR LAN CIRCUIT" .

Intake Door Motor Circuit

AJS001KR

SYMPTOM:

- Intake door does not change.
- Intake door motor does not operate normally.

INSPECTION FLOW

1. Confirm symptom by performing the following operational check.

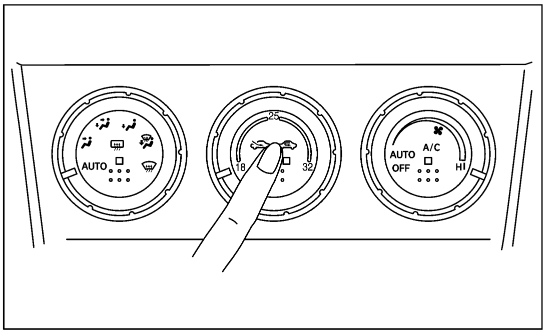

a. Press intake switch.
   Recirculation indicator should illuminate.
b. Press intake switch again.
   Fresh indicator should illuminate.
c. Listen for intake door position change (slight change of blower sound can be heard).

If OK (symptom cannot be duplicated), perform complete operational check (*1).
If NG (symptom is confirmed), continue with STEP-2 following.

2. Check for any service bulletins.

3. Perform self-diagnosis STEP-1. (*2)

OK

4. Perform self-diagnosis STEP-2. (*3)

NG → Go to appropriate malfunctioning sensor circuit. (*10)

OK

5. Perform self-diagnosis STEP-4. (*3)

NG → Check intake door motor. (*12)
- OK → Go to LAN system circuit. (*11)
- NG → Replace intake door motor.

OK

[Cause cannot be confirmed by self-diagnosis.]

6. Check ambient sensor circuit. (*4)

OK

7. Check in-vehicle sensor circuit. (*5)

OK

8. Check sunload sensor circuit. (*6)

OK

9. Check intake sensor circuit. (*7)

OK

10. Check air mix door motor circuit. (*8)

OK

If the symptom still exists, perform a complete operational check (*1) and check for other symptoms. [Refer to symptom table, (*9).] Does another symptom exist?

- YES → Go To Trouble Diagnosis for related symptoms. **Another symptom exists.**
- NO → Replace auto amp. → INSPECTION END

SJIA1107E

*1	ATC-50, "Operational Check"	*2	ATC-44, "FUNCTION CONFIRMATION PROCEDURE", see No. 1.	*3	ATC-44, "FUNCTION CONFIRMATION PROCEDURE", see No. 5 to 7.
*4	ATC-88, "Ambient Sensor Circuit"	*5	ATC-90, "In-vehicle Sensor Circuit"	*6	ATC-93, "Sunload Sensor Circuit"
*7	ATC-96, "Intake Sensor Circuit"	*8	ATC-59, "Air Mix Door Motor Circuit"	*9	ATC-32, "SYMPTOM TABLE"
*10	ATC-44, "FUNCTION CONFIRMATION PROCEDURE", see No. 9.	*11	ATC-53, "LAN System Circuit"	*12	ATC-106, "INTAKE DOOR MOTOR"

SYSTEM DESCRIPTION

Component Parts

Intake door control system components are:

- Auto amp.
- Intake door motor (LCU)
- A/C LAN system (PBR built-in air mix door motor, mode door motor and intake door motor)
- In-vehicle sensor
- Ambient sensor
- Sunload sensor
- Intake sensor

System Operation

The intake door control determines intake door position based on the ambient temperature, the intake air temperature and the in-vehicle temperature. When set mode control dial to D/F, D/F2 and DEF position, or OFF position, the auto amp. sets the intake door at the FRESH position.

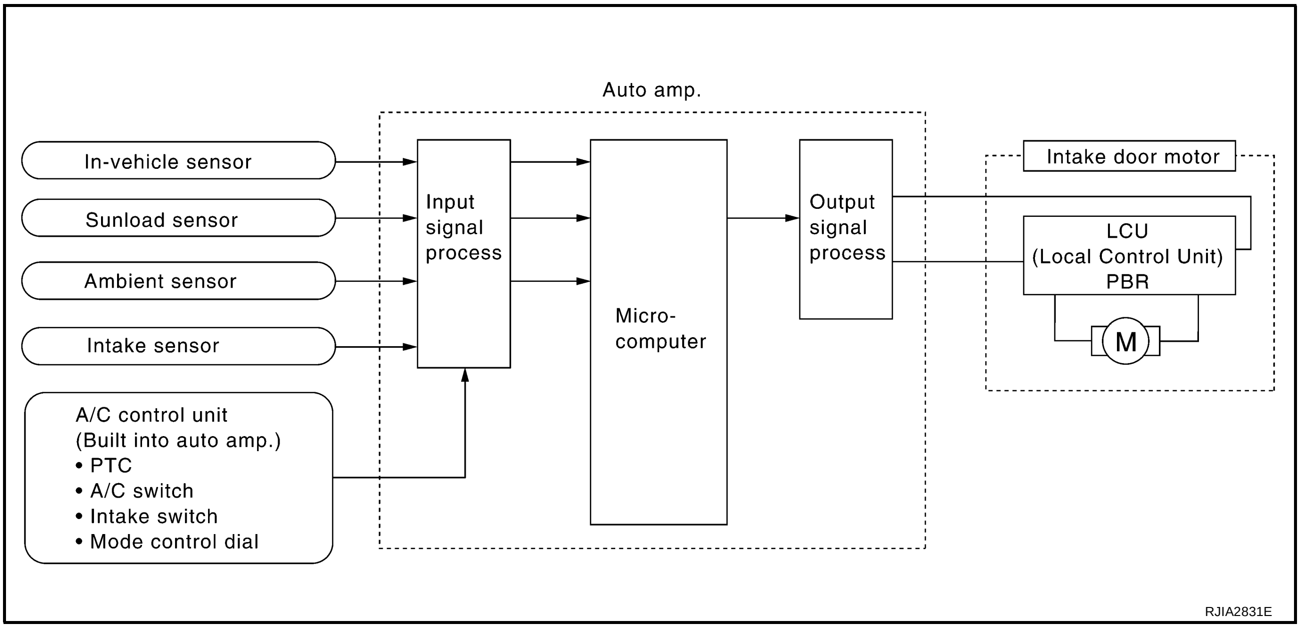

Intake Door Control Specification

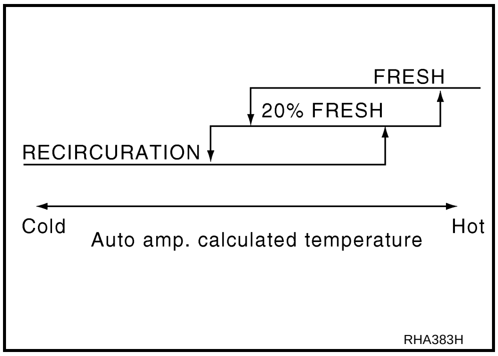

COMPONENT DESCRIPTION

Intake Door Motor

The intake door motor is attached to the intake unit. It rotates so that air is drawn from inlets set by the auto amp. Motor rotation is conveyed to a lever which activates the intake door.

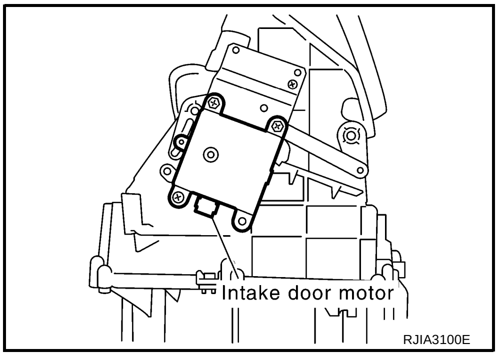

DIAGNOSIS PROCEDURE FOR INTAKE DOOR MOTOR

SYMPTOM: Intake door motor does not operate normally.
Perform diagnosis procedure. Refer to ATC-53, "DIAGNOSIS PROCEDURE FOR LAN CIRCUIT" .

Blower Motor Circuit

AJS001KS

SYMPTOM:

- Blower motor operation is malfunctioning.
- Blower motor operation is malfunctioning under out of starting fan speed control.

INSPECTION FLOW

1. Confirm symptom by performing the following operational check.

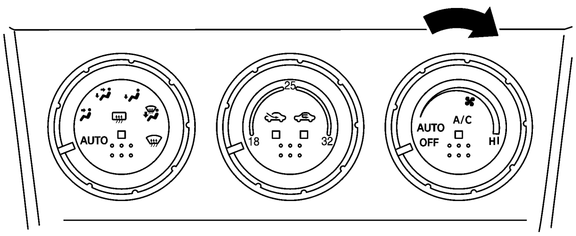

OPERATIONAL CHECK - Blower
Turn fan control dial clockwise,
and continue checking blower speed until all speeds are checked.
If OK (symptom cannot be duplicated), perform complete operational check (*1).
If NG (symptom is confirmed), continue with STEP-2 following.

2. Check for any service bulletins. → 3. Perform self-diagnosis STEP-1. (*2)

OK ↓

4. Perform self-diagnosis STEP-2. (*3) — NG → Go to appropriate malfunctioning sensor circuit. (*10)

OK ↓

5. Perform self-diagnosis STEP-4. (*4)
Does blower motor speed change according to each code No.? — NO → Go to Blower Motor Circuit. (*11)

Code No.	41	42	43	44	45	46
Blower motor voltage	4.5V	10.5V	8.5V	8.5V	8.5V	12V

YES ↓

6. Is engine coolant temperature below 56°C(133°F)? — NO → Blower motor operation is normal.

YES ↓

7. Is blower motor operating under starting blower speed control? — NO → Go to Blower Motor Circuit. (*11) — OK ↓ Check engine coolant temperature sensor circuit. (*12)

YES **[Cause cannot be confirmed by self-diagnosis.]** ↓

8. Check ambient sensor circuit. (*5)

OK ↓

9. Check in-vehicle sensor circuit. (*6)

OK ↓

10. Check sunload sensor circuit. (*7)

OK ↓

11. Check intake sensor circuit. (*8)

OK ↓

If the symptom still exists, perform a complete operational check (*1) and check for other symptoms. [Refer to symptom table, (*9).] Does another symptom exist? — YES → Go to Trouble Diagnosis for related symptom.

Another symptom exists.

NO ↓

Replace auto amp. → INSPECTION END

RJIA3101E

*1 ATC-50, "Operational Check"
*2 ATC-44, "FUNCTION CONFIRMATION PROCEDURE", see No. 1.
*3 ATC-44, "FUNCTION CONFIRMATION PROCEDURE", see No. 5.
*4 ATC-44, "FUNCTION CONFIRMATION PROCEDURE", see No. 7.
*5 ATC-88, "Ambient Sensor Circuit"
*6 ATC-90, "In-vehicle Sensor Circuit"
*7 ATC-93, "Sunload Sensor Circuit"
*8 ATC-96, "Intake Sensor Circuit"
*9 ATC-32, "SYMPTOM TABLE"
*10 ATC-44, "FUNCTION CONFIRMATION PROCEDURE", see No. 9.
*11 ATC-67, "DIAGNOSIS PROCEDURE FOR BLOWER MOTOR"
*12 EC-201, "DTC P0117, P0118 ECT SENSOR"

SYSTEM DESCRIPTION

Component Parts

Fan speed control system components are:

- Auto amp.
- A/C LAN system (PBR built-in air mix door motor, mode door motor and intake door motor)
- Fan control amp.
- In-vehicle sensor
- Ambient sensor
- Sunload sensor
- Intake sensor

System Operation

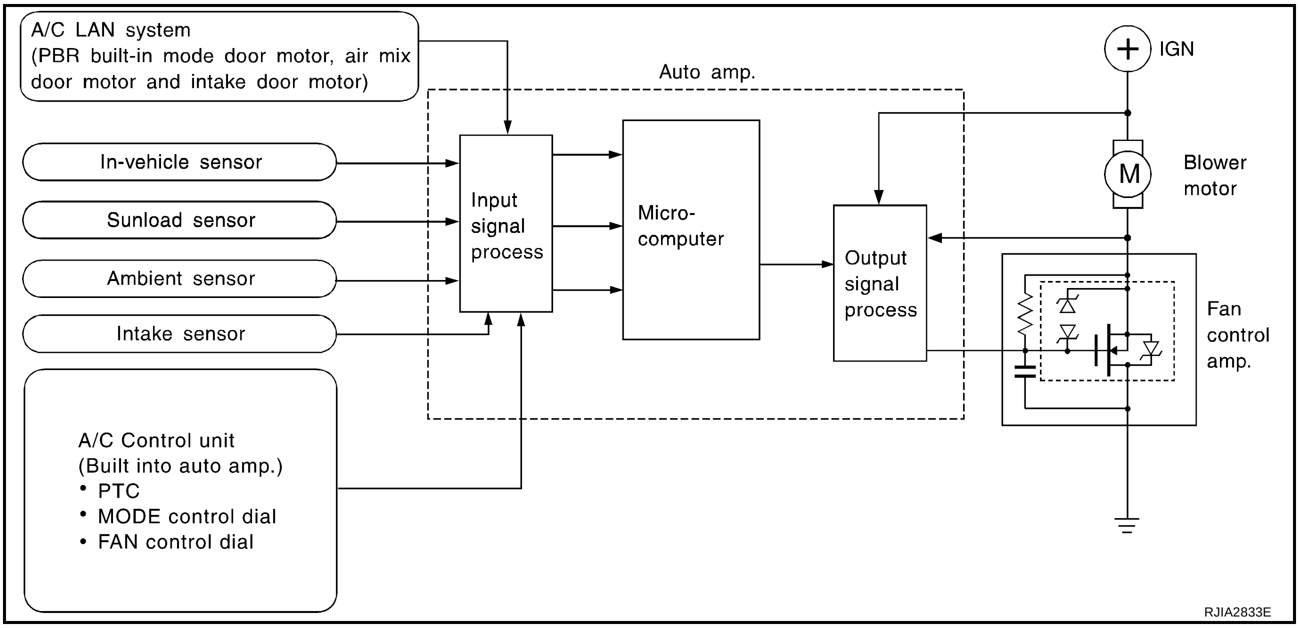

Automatic Mode

In the automatic mode, the blower motor speed is calculated by the auto amp. based on input from the PBR, in-vehicle sensor, sunload sensor, intake sensor and ambient sensor.
The blower motor applied voltage ranges from approximately 4 volts (lowest speed) to 12 volts (highest speed).
The control blower speed (in the range of 4 to 12 V), the auto amp. supplies a gate voltage to the fan control amp. Based on this voltage, the fan control amp. controls the voltage supplied to the blower motor.

Starting Fan Speed Control

Start up from COLD SOAK Condition (Automatic mode)
In a cold start up condition where the engine coolant temperature is below 56°C (133°F), the blower will not operate for a short period of time (up to 150 seconds). The exact start delay time varies depending on the ambient and engine coolant temperature.
In the most extreme case (very low ambient) the blower starting delay will be 150 seconds as described above. After this delay, the blower will operate at low speed until the engine coolant temperature rises above 56°C (133°F), and then the blower speed will increase to the objective speed.
Start up from usual or HOT SOAK Condition (Automatic mode)
The blower will begin operation momentarily after the A/C switch is pushed. The blower speed will gradually rise to the objective speed over a time period of 3 seconds or less (actual time depends on the objective blower speed).

Blower Speed Compensation

Sunload
When the in-vehicle temperature and the set temperature are very close, the blower will be operating at low speed. The low speed will vary depending on the sunload. During conditions of low or no sunload, the blower

low speed is usual low speed (approx. 4 V). During high sunload conditions, the auto amp. causes the blower fan speed to increase (approx. 7 V).

Fan Speed Control Specification

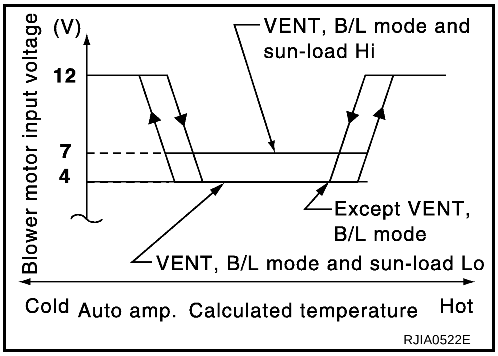

RJIA0522E

COMPONENT DESCRIPTION

Fan Control Amp.

The fan control amp. is located on the intake unit. The fan control amp. receives a gate voltage from the auto amp. to steeples maintain the blower fan motor voltage in the 4 to 12 volt range.

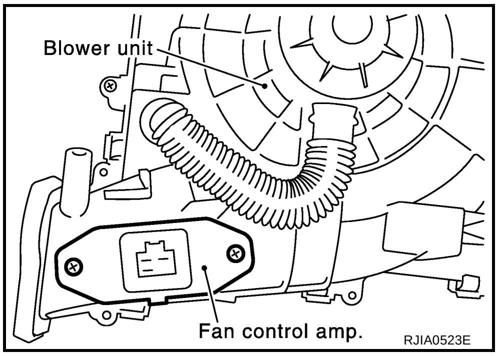

RJIA0523E

DIAGNOSIS PROCEDURE FOR BLOWER MOTOR

SYMPTOM: Blower motor operation is malfunctioning.

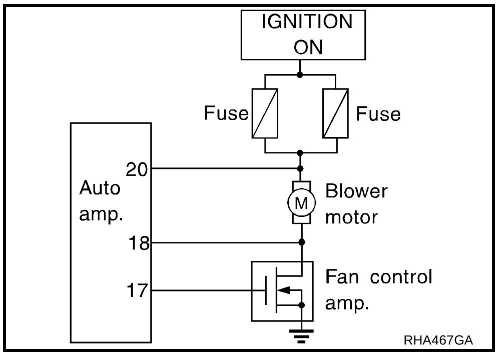

RHA467GA

1. CHECK POWER SUPPLY FOR BLOWER MOTOR

1. Disconnect blower motor connector.
2. Turn ignition switch ON.
3. Check voltage between blower motor harness connector M65 terminal 1 and ground.

1 – Ground : Battery voltage

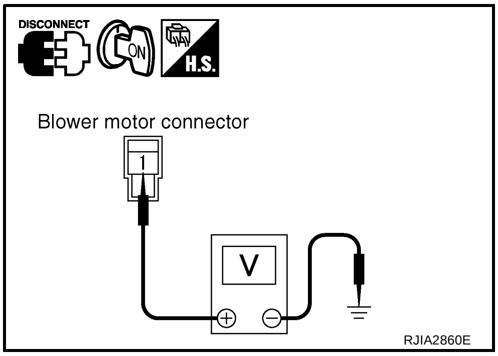

RJIA2860E

OK or NG

OK >> GO TO 2.

NG >> Check power supply circuit and 15 A fuses [Nos. 19 and 24, located in the fuse block (J/B)]. Refer to PG-51, "FUSE BLOCK - JUNCTION BOX (J/B)" .

- If fuses are OK, check harness for open circuit. Repair or replace if necessary.
- If fuses are NG, replace fuse and check harness for short circuit. Repair or replace if necessary.

2. CHECK FAN FEEDBACK CIRCUIT

1. Turn ignition switch OFF.
2. Reconnect blower motor connector.
3. Check voltage between auto amp. harness connector M52 terminal 18 and ground.

18 – Ground : Battery voltage

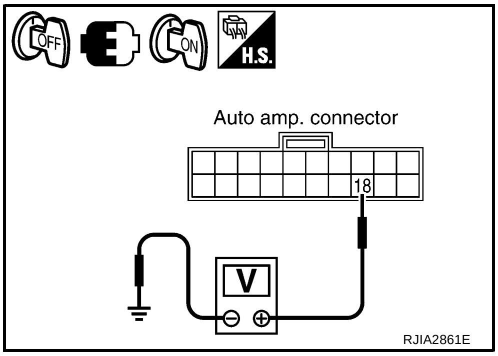

OK or NG

OK >> GO TO 3.
NG >> GO TO 9.

3. CHECK BLOWER MOTOR

Refer to ATC-70, "COMPONENT INSPECTION" .

OK or NG

OK >> GO TO 4.
NG >> Replace blower motor.

4. CHECK POWER SUPPLY FOR FAN CONTROL AMP.

1. Turn ignition switch ON.
2. Check voltage between fan control amp. harness connector M67 terminal 3 and ground.

Terminals			Condition	Voltage
(+)		(–)		
Fan control amp. connector	Terminal No.			
M67	3	Ground	Fan speed: 1st	Approx. 8 V

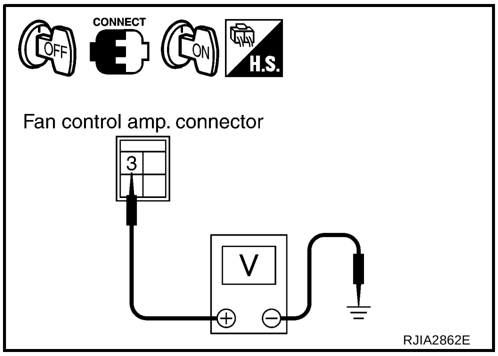

OK or NG

OK >> GO TO 5.
NG >> Repair harness or connector.

5. CHECK GROUND CIRCUIT FOR FAN CONTROL AMP.

1. Turn ignition switch OFF.
2. Disconnect fan control amp. connector.
3. Check continuity between fan control amp. harness connector M67 terminal 1 and ground.

1 – Ground : Continuity should exist.

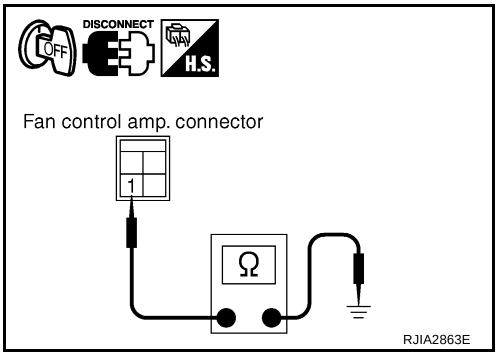

OK or NG

OK >> GO TO 6.
NG >> Repair harness or connector.

6. CHECK FOR AUTO AMP. OUTPUT SIGNAL

1. Reconnect the fan control amp. connector.
2. Turn ignition switch ON.
3. Check voltage between fan control amp. harness connector M67 terminal 2 and ground.

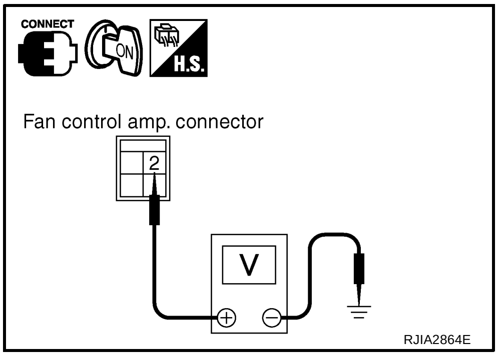

Terminals			Condition	Voltage
(+)		(−)		
Fan control amp. connector	Terminal No.			
M67	2	Ground	Fan speed: 1st - 24th	Approx. 2.5 - 3.5 V
			Fan speed: 25th	Approx. 9.0 V

OK or NG

OK >> GO TO 9.
NG >>
- If the voltage is less than 2.5 V: GO TO 7.
- If the voltage is more than 9.0 V: GO TO 8.

7. CHECK CIRCUIT CONTINUITY BETWEEN AUTO AMP. AND FAN CONTROL AMP.

1. Turn ignition switch OFF.
2. Disconnect the auto amp. connector and fan control amp. connector.
3. Check continuity between auto amp. harness connector M52 terminal 17 and fan control amp. harness connector M67 terminal 2.

17 – 2 : Continuity should exist.

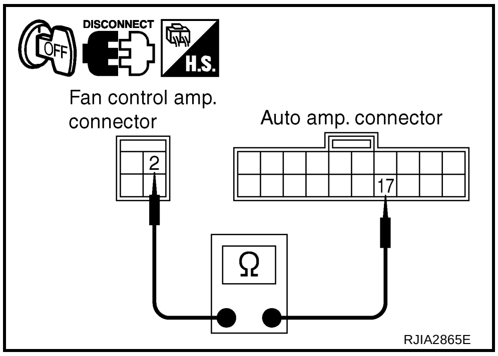

OK or NG

OK >> Replace fan control amp.
NG >> Repair harness or connector.

8. CHECK FAN CONTROL AMP.

1. Turn ignition switch OFF.
2. Disconnect the fan control amp. connector.
3. Check continuity between fan control amp. connector M67 terminal 2 and 1.

2 – 1 : Continuity should exist.

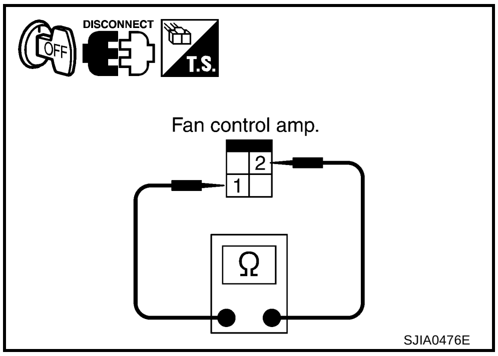

OK or NG

OK >> GO TO 9.
NG >> Replace fan control amp.

9. CHECK CIRCUIT CONTINUITY BETWEEN AUTO AMP. AND FAN CONTROL AMP.

1. Turn ignition switch OFF.
2. Disconnect auto amp. connector.
3. Check continuity between auto amp. harness connector M52 terminal 18 and fan control amp. harness connector M67 terminal 3.

18 – 3 : Continuity should exist.

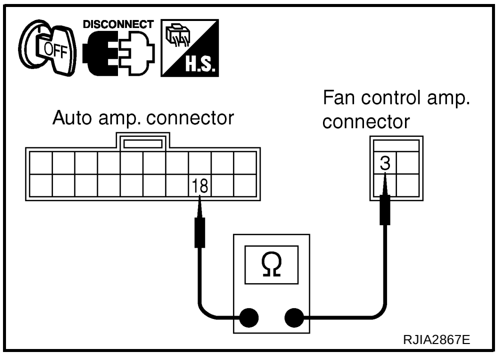

OK or NG

OK >> Replace auto amp.
NG >> Repair harness or connector.

COMPONENT INSPECTION

Blower Motor

Confirm smooth rotation of the blower motor.

- Ensure that there are no foreign particles inside the blower unit.

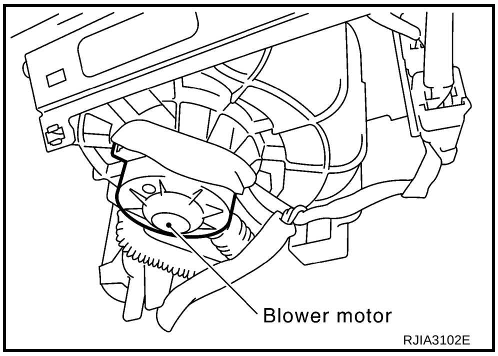

Magnet Clutch Circuit

AJS001KT

SYMPTOM: Magnet clutch does not engage.

INSPECTION FLOW

1. Confirm symptom by performing operational check.

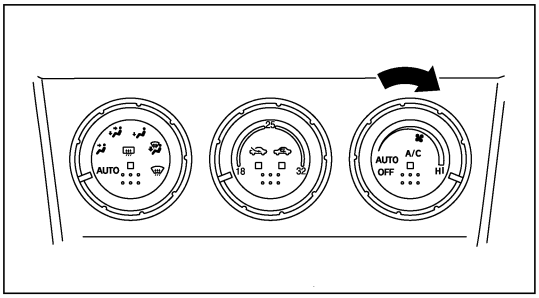

OPERATIONAL CHECK

a. Turn fan control dial to ON.
b. Press A/C switch
   Confirm that the compressor clutch engages (sound or visual inspection).
   (Discharge air and blower speed will depend on ambient, in-vehicle and set temperatures.)

If OK (symptom cannot be duplicated), perform complete operational check (*1).
If NG (symptom is confirmed), continue with STEP-2 following.

↓

2. Check for any service bulletins. → 3. Perform self-diagnosis STEP-1. (*2)

↓ OK

4. Perform self-diagnosis STEP-2. (*3) — NG → Go to appropriate malfunctioning sensor circuit. (*7)

↓ OK

5. Perform self-diagnosis STEP-4. (*3) — NG → Go to Magnet Clutch Circuit. (*8)
- Check Magnet Clutch Mechanism.
- Check for refrigerant pressure. (*9)

↓ OK

[Cause cannot be confirmed by self-diagnosis.]

6. Check ambient sensor circuit. (*4)

↓ OK

9. Check intake sensor circuit. (*5)

↓ OK

If the symptom still exists, perform a complete operational check (*1) and check for other symptoms. [Refer to symptom table, (*6).] Dose another symptom exist? — YES → Go to Trouble Diagnosis for related symptom.

Another symptom exists.

↓ NO

Replace auto amp. → INSPECTION END

RJIA3103E

*1	ATC-50, "Operational Check"	*2	ATC-44, "FUNCTION CONFIRMATION PROCEDURE", see No. 1.	*3	ATC-44, "FUNCTION CONFIRMATION PROCEDURE", see No. 5 to 7.
*4	ATC-88, "Ambient Sensor Circuit"	*5	ATC-96, "Intake Sensor Circuit"	*6	ATC-32, "SYMPTOM TABLE"
*7	ATC-44, "FUNCTION CONFIRMATION PROCEDURE", see No. 9.	*8	ATC-72, "DIAGNOSIS PROCEDURE FOR MAGNET CLUTCH"	*9	ATC-82, "TROUBLE DIAGNOSIS FOR UNUSUAL PRESSURE"

SYSTEM DESCRIPTION

Auto amp. controls compressor operation by ambient temperature and signal from ECM.

Low Temperature Protection Control

Auto amp. will turn compressor ON or OFF as determined by a signal detected by ambient sensor. When ambient temperature is higher than –2°C (28°F), the compressor turns ON. The compressor turns OFF when ambient temperature is lower than –5°C (23°F).

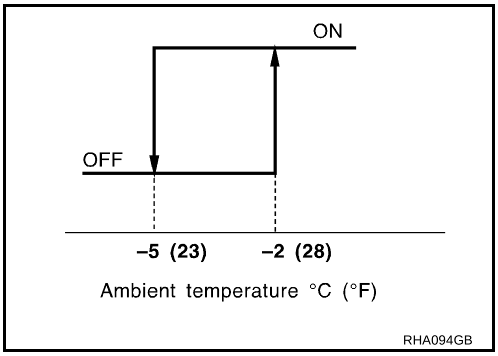

DIAGNOSIS PROCEDURE FOR MAGNET CLUTCH

SYMPTOM: Magnet clutch does not engage when A/C switch is ON.

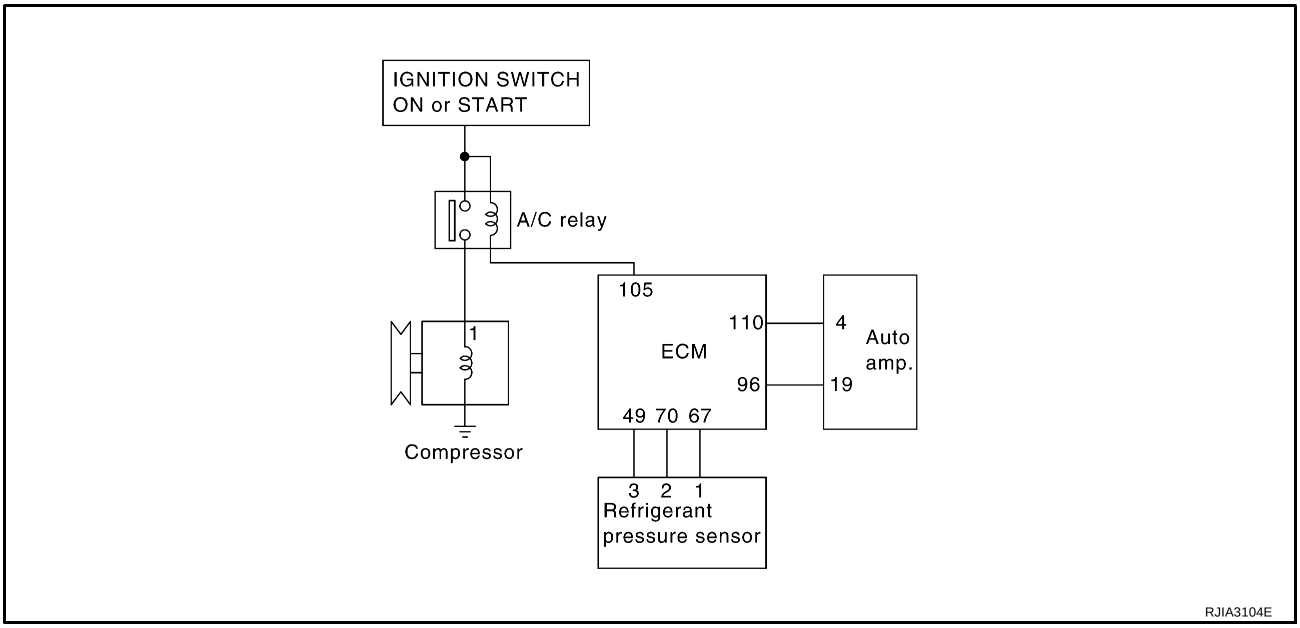

1. CHECK POWER SUPPLY FOR COMPRESSOR

1. Disconnect compressor connector.
2. Start the engine.
3. Turn fan control dial to AUTO position.
4. Press A/C switch.
5. Check voltage between compressor harness connector E34 terminal 1 and ground.

1 – Ground : Battery voltage

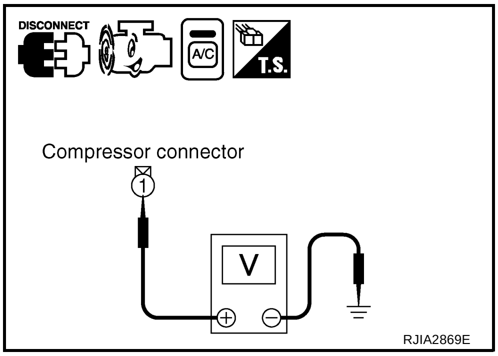

OK or NG

OK >> GO TO 2.
NG >> GO TO 3.

2. CHECK MAGNET CLUTCH CIRCUIT

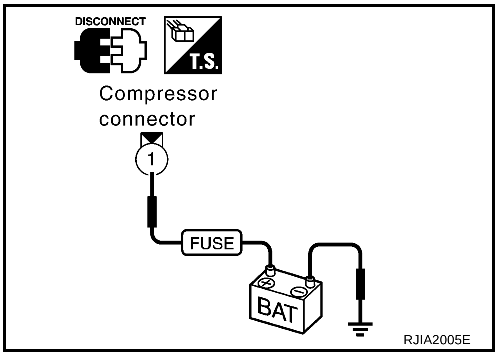

Check for operation sound when applying battery voltage direct current to terminal.

OK or NG

OK >> 1. Repair harness or connector.
2. Go to self-diagnosis procedure ATC-44, "FUNCTION CONFIRMATION PROCEDURE" and perform self-diagnosis STEP-4. Confirm that magnet clutch operation is usual.

NG >> 1. Replace magnet clutch. Refer to ATC-123, "Removal and Installation of Compressor Clutch" .
2. Go to self-diagnosis procedure ATC-44, "FUNCTION CONFIRMATION PROCEDURE" and perform self-diagnosis STEP-4. Confirm that magnet clutch operation is usual.

3. CHECK CIRCUIT CONTINUITY BETWEEN A/C RELAY AND COMPRESSOR

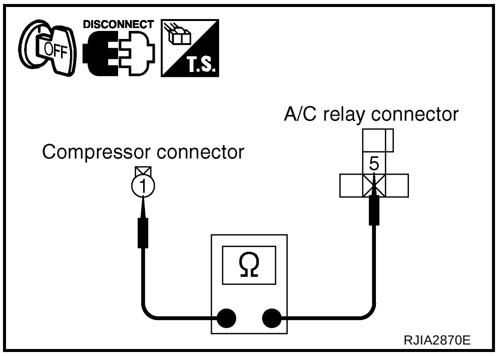

1. Turn ignition switch OFF.
2. Disconnect A/C relay connector.
3. Check continuity between A/C relay harness connector E5 terminal 5 and compressor harness connector E34 terminal 1.

5 – 1 : Continuity should exist.

OK or NG

OK >> GO TO 4.
NG >> Repair harness or connector.

4. CHECK POWER SUPPLY FOR A/C RELAY

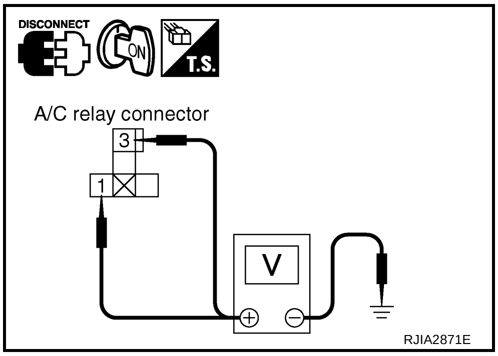

1. Turn ignition switch ON.
2. Check voltage between A/C relay harness connector E5 terminal 1, 3 and ground.

1 – Ground : Battery voltage
3 – Ground : Battery voltage

OK or NG

OK >> GO TO 5.
NG >> Check power supply circuit and 10 A fuse [No. 15 located in the fuse block (J/B)]. Refer to PG-51, "FUSE BLOCK - JUNCTION BOX (J/B)" .
- If fuse is OK, check harness for open circuit. Repair or replace if necessary.
- If fuse is NG, replace fuse and check harness for short circuit. Repair or replace if necessary.

5. CHECK A/C RELAY AFTER DISCONNECTING IT

Refer to ATC-76, "A/C Relay" .

OK or NG

OK >> GO TO 6.
NG >> 1. Replace A/C relay.
2. Go to self-diagnosis procedure ATC-44, "FUNCTION CONFIRMATION PROCEDURE" and perform self-diagnosis STEP-4. Confirm that magnet clutch operation is usual.

6. CHECK COIL SIDE CIRCUIT OF A/C RELAY

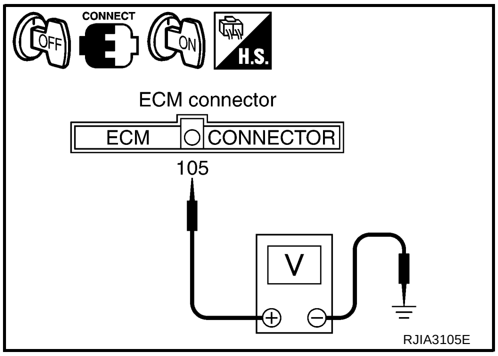

1. Turn ignition switch OFF.
2. Reconnect A/C relay connector.
3. Start the engine.
4. Check voltage between ECM harness connector F43 terminal 105 and ground.

105 – Ground : Battery voltage

OK or NG

OK >> GO TO 7.
NG >> Repair harness or connector.

7. CHECK AMBIENT SENSOR

Refer to ATC-88, "Ambient Sensor Circuit" .

OK or NG

OK >> GO TO 8.
NG >> Repair or replace the malfunctioning part(s).

8. CHECK REFRIGERANT PRESSURE SENSOR

Refer to EC-634, "REFRIGERANT PRESSURE SENSOR" .

OK or NG

OK >> GO TO 9.
NG >> Repair or replace the malfunctioning part(s).

9. CHECK VOLTAGE FOR AUTO AMP. (COMPRESSOR ON SIGNAL)

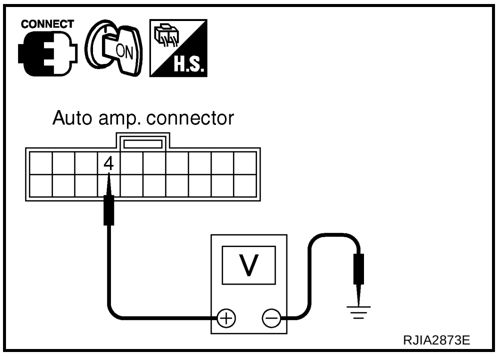

1. Turn ignition switch ON.
2. Check voltage between auto amp. harness connector M52 terminal 4 and ground.

Terminals			Condition	Voltage
(+)		(–)		
Auto amp. connector	Terminal No.			
M52	4	Ground	A/C SW: ON (Blower motor operates.)	Approx. 0 V
			A/C SW: OFF	Approx. 5 V

OK or NG

OK >> GO TO 10.
NG >>
- If the voltage is approx. 5 V when the A/C switch is ON: Replace the auto amp.
- If the voltage is approx. 0 V when the A/C switch is OFF: GO TO 12.

10. CHECK VOLTAGE FOR AUTO AMP. (FAN ON SIGNAL)

Check voltage between auto amp. harness connector M52 terminal 19 and ground.

Terminals			Condition	Voltage
(+)		(–)		
Auto amp. connector	Terminal No.			
M52	19	Ground	Fan control dial: ON (Blower motor operates.)	Approx. 0 V
			Fan control dial: OFF	Approx. 5 V

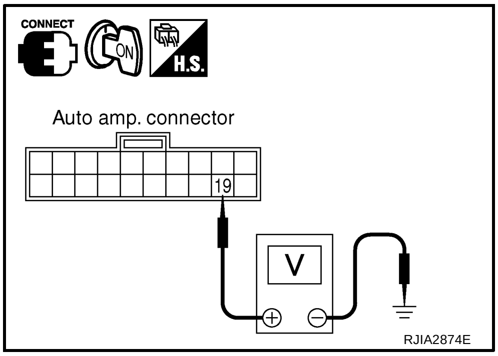

OK or NG

OK >> Replace auto amp.

NG >>
- If the voltage is approx. 5 V when the blower motor is ON: Replace the auto amp.
- If the voltage is approx. 0 V when the blower motor is OFF: GO TO 11.

11. CHECK CIRCUIT CONTINUITY BETWEEN ECM AND AUTO AMP.

1. Turn ignition switch OFF.
2. Disconnect ECM connector and auto amp. connector.
3. Check continuity between ECM harness connector F43 terminal 96 and auto amp. harness connector M52 terminal 19.

96 – 19 : Continuity should exist.

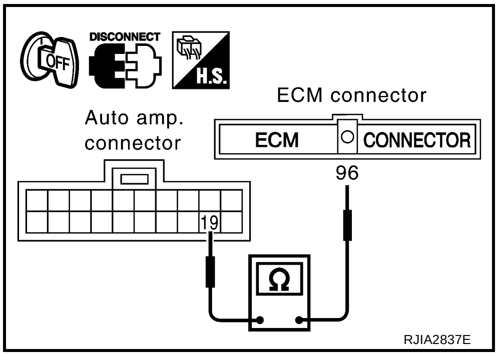

OK or NG

OK >> INSPECTION END

NG >> Repair harness or connector.

12. CHECK CIRCUIT CONTINUITY BETWEEN ECM AND AUTO AMP.

1. Turn ignition switch OFF.
2. Disconnect ECM connector and auto amp. connector.
3. Check continuity between ECM harness connector F43 terminal 110 and auto amp. harness connector M52 terminal 4.

110 – 4 : Continuity should exist.

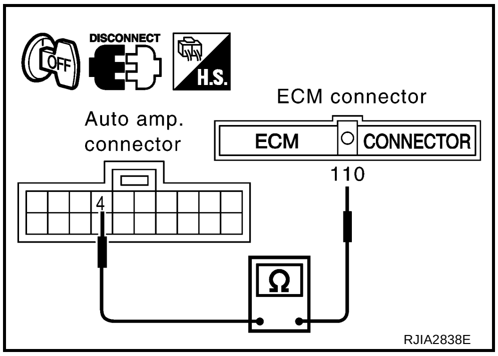

OK or NG

OK >> GO TO 13.

NG >> Repair harness or connector.

13. CHECK REFRIGERANT PRESSURE SENSOR CIRCUIT

Refer to EC-634, "REFRIGERANT PRESSURE SENSOR" .

OK or NG

OK >> INSPECTION END

NG >> Repair or replace the malfunctioning part(s).

COMPONENT INSPECTION

A/C Relay

Check continuity between terminal Nos. 3 and 5.

Conditions	Continuity
12V direct current supply between terminal Nos. 1 and 2	Yes
No current supply	No

If NG, replace relay.

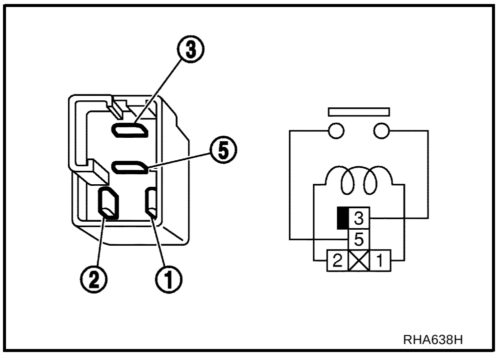

Refrigerant Pressure Sensor

The refrigerant pressure sensor is attached to the liquid tank.
Make sure that the A/C refrigerant pressure and the sensor output voltage are within the specified range as shown in the A/C operating condition figure. Refer to EC-634, "REFRIGERANT PRESSURE SENSOR" .

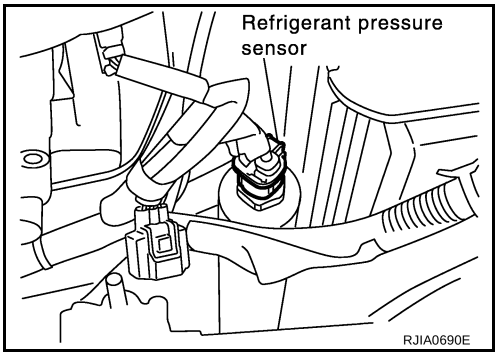

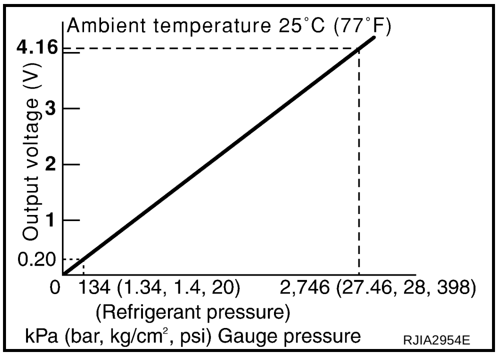

Insufficient Cooling

AJS001KU

SYMPTOM: Insufficient cooling

INSPECTION FLOW

1. Confirm symptom by performing the following operational check.

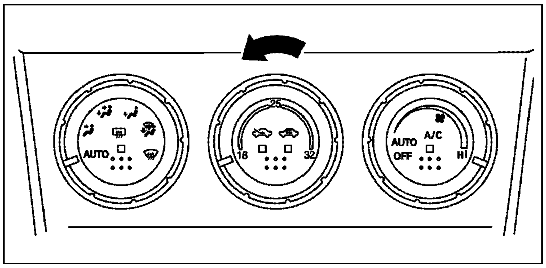

OPERATIONAL CHECK – Temperature decrease

a. Turn temperature control dial counterclockwise until 18°C.

b. Check for cold air at discharge air outlets.

If OK (symptom cannot be duplicated), perform complete operational check (*1).

If NG (symptom is confirmed), continue with STEP-2 following.

↓

2. Check for any service bulletins. → 3. Perform self-diagnosis STEP-1. (*2)

↓ OK

4. Perform self-diagnosis STEP-2. (*3)
   - NG → Go to appropriate malfunctioning sensor circuit. (*8)

↓ OK

5. Perform self-diagnosis STEP-4. (*3)
   - NG → **Go to appropriate malfunctioning items.**
     - Check LAN system circuit. (*9)
     - Check blower motor circuit. (*10)
     - Check magnet clutch circuit. (*11)

↓ OK

6. Check compressor belt tension. Refer to (*4), "Checking Drive Belts".
   - NG → Adjust or replace compressor belt.

↓ OK

7. Check air mix door operation.(*5)
   - NG → Replace air mix door motor.

↓ OK

8. Check cooling fan motor operation.
   - NG → Refer to (*12), "System Description".

↓ OK

9. Before connecting Recovery/Recycling/Recharging equipment to vehicle, check Recovery/Recycling/Recharging equipment gauges. No refrigerant pressure should be displayed. If NG, recover refrigerant from equipment lines.

↓ OK

10. Confirm refrigerant purity in supply tank using Recovery/Recycling/Recharging eguipment and refrigerant identifier.
    - NG → Refer to contaminated refrigerant. (*14).

↓ OK

11. Connect Recovery/Recycling/Recharging equipment to vehicle. Confirm refrigerant purity in vehicle A/C system using Recovery/Recycling/Recharging equipment with refrigerant identifer.
    - NG → Refer to contaminated refrigerant. (*14).

↓ OK

12. Check for evaporator core freeze up.
    - NG (Freeze up.) → Perform performance test diagnosis. Refer to (*13).

(Dose not freeze up.)

↓ OK

13. Check refrigeration cycle pressure with manifold gauge connected. Refer to (*6).
    - NG → Perform performance test diagnosis. Refer to (*13).

↓ OK

14. Check ducts for air leaks.
    - NG → Replair air leaks.

↓ OK

15. Perform temperature setting trimmer. (*7)
    (1) Set up AUXILIARY MECHANISM mode in self-diagnosis.
    (2) Turn temperature dial counterclockwise as desired.

↓ OK

INSPECTION END

RJIA3106E

*1 ATC-50, "Operational Check"

*2 ATC-44, "FUNCTION CONFIRMATION PROCEDURE", see No. 1.

*3 ATC-44, "FUNCTION CONFIRMATION PROCEDURE", see No. 5 to 7.

*4 EM-11, "Checking Drive Belt"

*5 ATC-59, "Air Mix Door Motor Circuit"

*6 ATC-81, "Test Reading"

*7 ATC-48, "AUXILIARY MECHANISM: TEMPERATURE SETTING TRIMMER"

*8 ATC-44, "FUNCTION CONFIRMATION PROCEDURE", see No. 9.

*9 ATC-53, "LAN System Circuit"

*10 ATC-65, "Blower Motor Circuit"

*11 ATC-71, "Magnet Clutch Circuit"

*12 EC-480, "SYSTEM DESCRIPTION"

*13 ATC-79, "PERFORMANCE TEST DIAGNOSIS"

*14 ATC-5, "CONTAMINATED REFRIGERANT"

PERFORMANCE TEST DIAGNOSIS

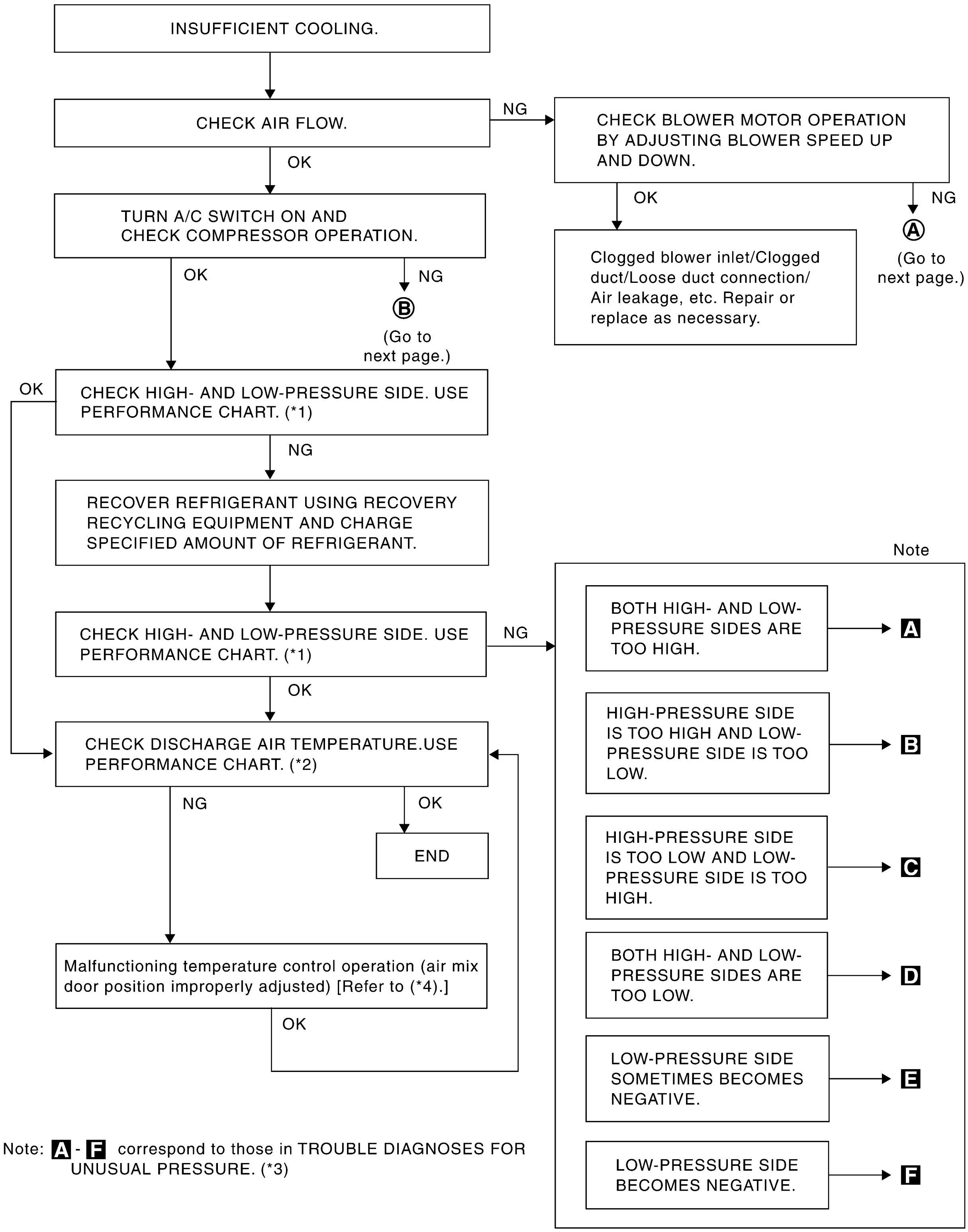

RJIA1601E

*1 ATC-81, "PERFORMANCE CHART" *2 ATC-81, "PERFORMANCE CHART" *3 ATC-82, "TROUBLE DIAGNOSIS FOR UNUSUAL PRESSURE"

*4 ATC-59, "Air Mix Door Motor Circuit"

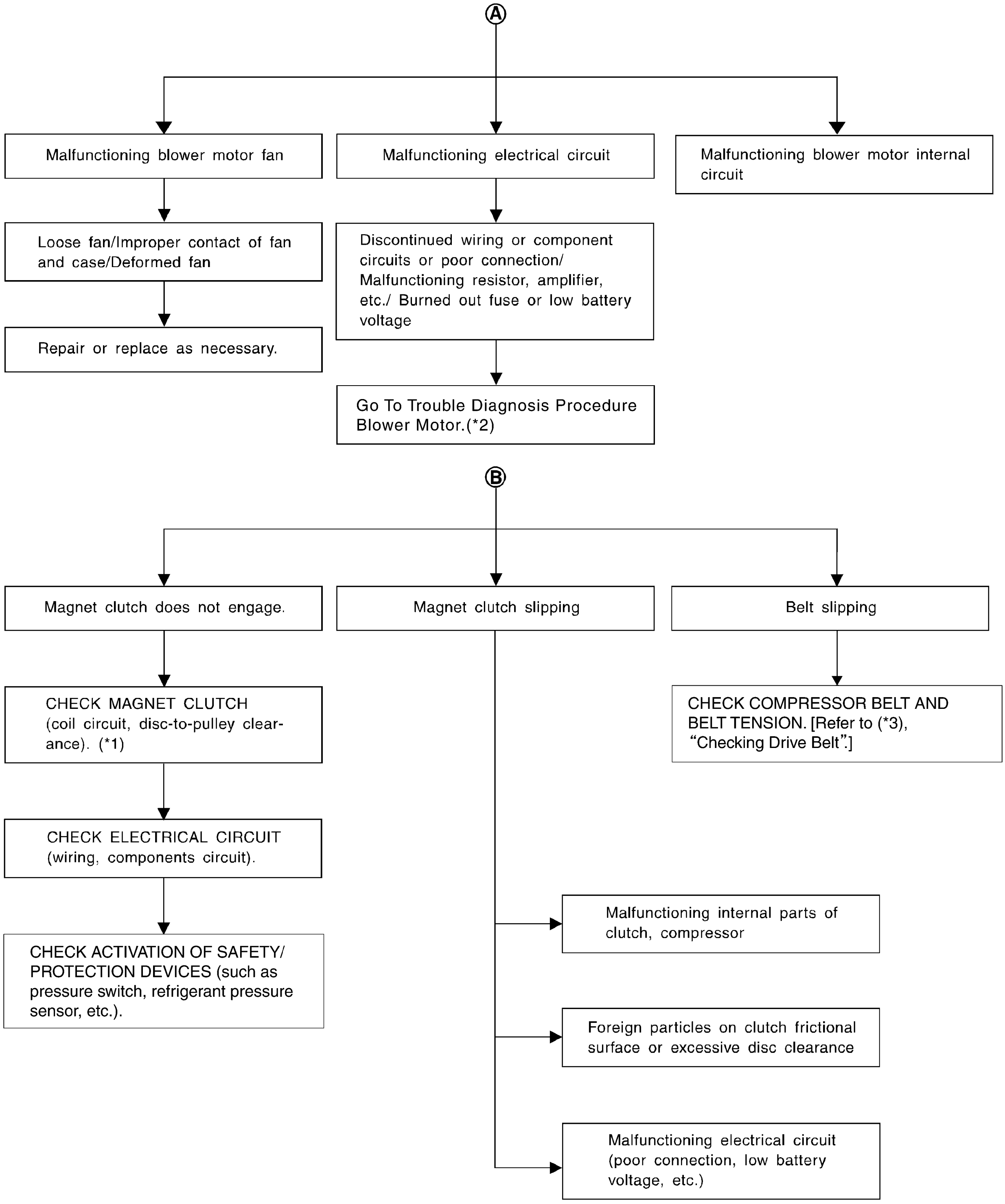

RJIA3107E

*1 ATC-123, "Removal and Installation of Compressor Clutch"
*2 ATC-65, "Blower Motor Circuit"
*3 EM-11, "Checking Drive Belt"

PERFORMANCE CHART

Test Condition

Testing must be performed as follows:

Vehicle location	Indoors or in the shade (in a well-ventilated place)
Doors	Closed
Door windows	Open
Hood	Open
TEMP.	Max. COLD
Mode control dial	(Ventilation) set
Intake switch	(Recirculation) set
Fan (blower) speed	Max. speed set
Engine speed	Idle speed
Operate the air conditioning system for 10 minutes before taking measurements.	

Test Reading

Recirculating-to-discharge Air Temperature Table

Inside air (Recirculating air) at blower assembly inlet		Discharge air temperature at center ventilator °C (°F)
Relative humidity %	Air temperature °C (°F)	
50 - 60	25 (77)	10.0 - 11.6 (50 - 53)
	30 (86)	13.9 - 16.2 (57 - 61)
	35 (95)	17.8 - 21.4 (64 - 71)
60 - 70	25 (77)	11.6 - 13.9 (53 - 57)
	30 (86)	16.2 - 18.9 (61 - 66)
	35 (95)	21.4 - 24.5 (71 - 76)

Ambient Air Temperature-to-operating Pressure Table

Ambient air		High-pressure (Discharge side) kPa (kg/cm^2 , psi)	Low-pressure (Suction side) kPa (kg/cm^2 , psi)
Relative humidity %	Air temperature °C (°F)		
50 - 70	30 (86)	980 - 1,180 (9.99 - 12.04, 142 - 171)	230 - 270 (2.35 - 2.75, 33 - 39)
	35 (95)	1,180 - 1,390 (12.04 - 14.18, 171 - 202)	260 - 310 (2.65 - 3.16, 38 - 45)
	40 (104)	1,400 - 1,580 (14.28 - 16.12, 203 - 229)	300 - 350 (3.06 - 3.57, 44 - 51)

TROUBLE DIAGNOSIS FOR UNUSUAL PRESSURE

Whenever system's high and/or low side pressure(s) is/are unusual, diagnose using a manifold gauge. The marker above the gauge scale in the following tables indicates the standard (usual) pressure range. Since the standard (usual) pressure, however, differs from vehicle to vehicle, refer to above table (Ambient air temperature-to-operating pressure table).

Both High- and Low-pressure Sides are Too High

Gauge indication	Refrigerant cycle	Probable cause	Corrective action
Both high- and low-pressure sides are too high. 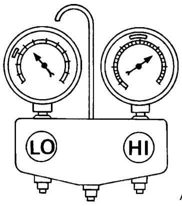 AC359A	Pressure is reduced soon after water is splashed on condenser.	Excessive refrigerant charge in refrigeration cycle	Reduce refrigerant until specified pressure is obtained.
	Air suction by cooling fan is insufficient.	Insufficient condenser cooling performance ↓ 1. Condenser fins are clogged. 2. Improper fan rotation of cooling fan	● Clean condenser. ● Check and repair cooling fan as necessary.
	● Low-pressure pipe is not cold. ● When compressor is stopped high-pressure value quickly drops by approximately 196 kPa (2 kg/cm^2 , 28 psi). It then decreases gradually thereafter.	Poor heat exchange in condenser (After compressor operation stops, high-pressure decreases too slowly.) ↓ Air in refrigeration cycle	Evacuate repeatedly and recharge system.
	Engine tends to overheat.	Engine cooling systems malfunction.	Check and repair each engine cooling system.
	● An area of the low-pressure pipe is colder than areas near the evaporator outlet. ● Plates are sometimes covered with frost.	● Excessive liquid refrigerant on low-pressure side ● Excessive refrigerant discharge flow ● Expansion valve is open a little compared with the specification. ↓ Improper expansion valve adjustment	Replace expansion valve.

High-pressure Side is Too High and Low-pressure Side is Too Low

Gauge indication	Refrigerant cycle	Probable cause	Corrective action
High-pressure side is too high and low-pressure side is too low. 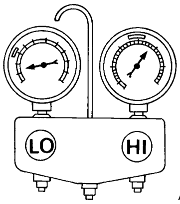 AC360A	Upper side of condenser and high-pressure side are hot, however, liquid tank is not so hot.	High-pressure tube or parts located between compressor and condenser are clogged or crushed.	● Check and repair or replace malfunctioning parts. ● Check lubricant for contamination.

High-pressure Side is Too Low and Low-pressure Side is Too High

Gauge indication	Refrigerant cycle	Probable cause	Corrective action
High-pressure side is too low and low-pressure side is too high. 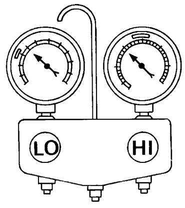 AC356A	High- and low-pressure sides become equal soon after compressor operation stops.	Compressor pressure operation is improper. ↓ Damaged inside compressor packings	Replace compressor.
	No temperature difference between high- and low-pressure sides	Compressor pressure operation is improper. ↓ Damaged inside compressor packings.	Replace compressor.

Both High- and Low-pressure Sides are Too Low

Gauge indication	Refrigerant cycle	Probable cause	Corrective action
Both high- and low-pressure sides are too low. 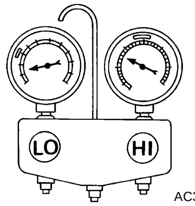 AC353A	● There is a big temperature difference between liquid tank outlet and inlet. Outlet temperature is extremely low. ● Liquid tank inlet and expansion valve are frosted.	Liquid tank inside is slightly clogged.	● Replace liquid tank. ● Check lubricant for contamination.
	● Temperature of expansion valve inlet is extremely low as compared with areas near liquid tank. ● Expansion valve inlet may be frosted. ● Temperature difference occurs somewhere in high-pressure side.	High-pressure pipe located between liquid tank and expansion valve is clogged.	● Check and repair malfunctioning parts. ● Check lubricant for contamination.
	Expansion valve and liquid tank are warm or slightly cool when touched.	Low refrigerant charge ↓ Leaking fittings or components	Check refrigerant for leaks. Refer to ATC-132, "Checking for Refrigerant Leaks" .
	There is a big temperature difference between expansion valve inlet and outlet while the valve itself is frosted.	Expansion valve closes a little compared with the specification. ↓ 1. Improper expansion valve adjustment 2. Malfunctioning expansion valve 3. Outlet and inlet may be clogged.	● Remove foreign particles by using compressed air. ● Replace expansion valve. ● Check lubricant for contamination.
	An area of the low-pressure pipe is colder than areas near the evaporator outlet.	Low-pressure pipe is clogged or crushed.	● Check and repair malfunctioning parts. ● Check lubricant for contamination.
	Air flow volume is not enough or is too low.	Evaporator is frozen.	● Replace compressor. ● Repair evaporator fins. ● Replace evaporator. ● Refer to ATC-65, "Blower Motor Circuit" .

Low-pressure Side Sometimes Becomes Negative

Gauge indication	Refrigerant cycle	Probable cause	Corrective action
Low-pressure side sometimes becomes negative. 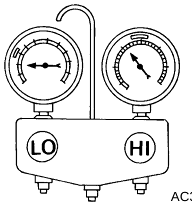 	● Air conditioning system does not function and does not cyclically cool the compartment air. ● The system constantly functions for a certain period of time after compressor is stopped and restarted.	Refrigerant does not discharge cyclically. ↓ Moisture is frozen at expansion valve outlet and inlet. ↓ Water is mixed with refrigerant.	● Drain water from refrigerant or replace refrigerant. ● Replace liquid tank.

Low-pressure Side Becomes Negative

Gauge indication	Refrigerant cycle	Probable cause	Corrective action
Low-pressure side becomes negative. 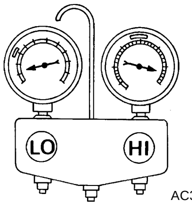 	Liquid tank or front/rear side of expansion valve's pipe is frosted or dewed.	High-pressure side is closed and refrigerant does not flow. ↓ Expansion valve or liquid tank is frosted.	Leave the system at rest until no frost is present. Start it again to check whether or not the malfunction is caused by water or foreign particles. ● If water is the cause, initially cooling is okay. Then the water freezes causing a blockage. Drain water from refrigerant or replace refrigerant. ● If due to foreign particles, remove expansion valve and remove the particles with dry and compressed air (not shop air). ● If either of the above methods cannot correct the malfunction, replace expansion valve. ● Replace liquid tank. ● Check lubricant for contamination.

Insufficient Heating

AJS001KV

SYMPTOM: Insufficient heating

INSPECTION FLOW

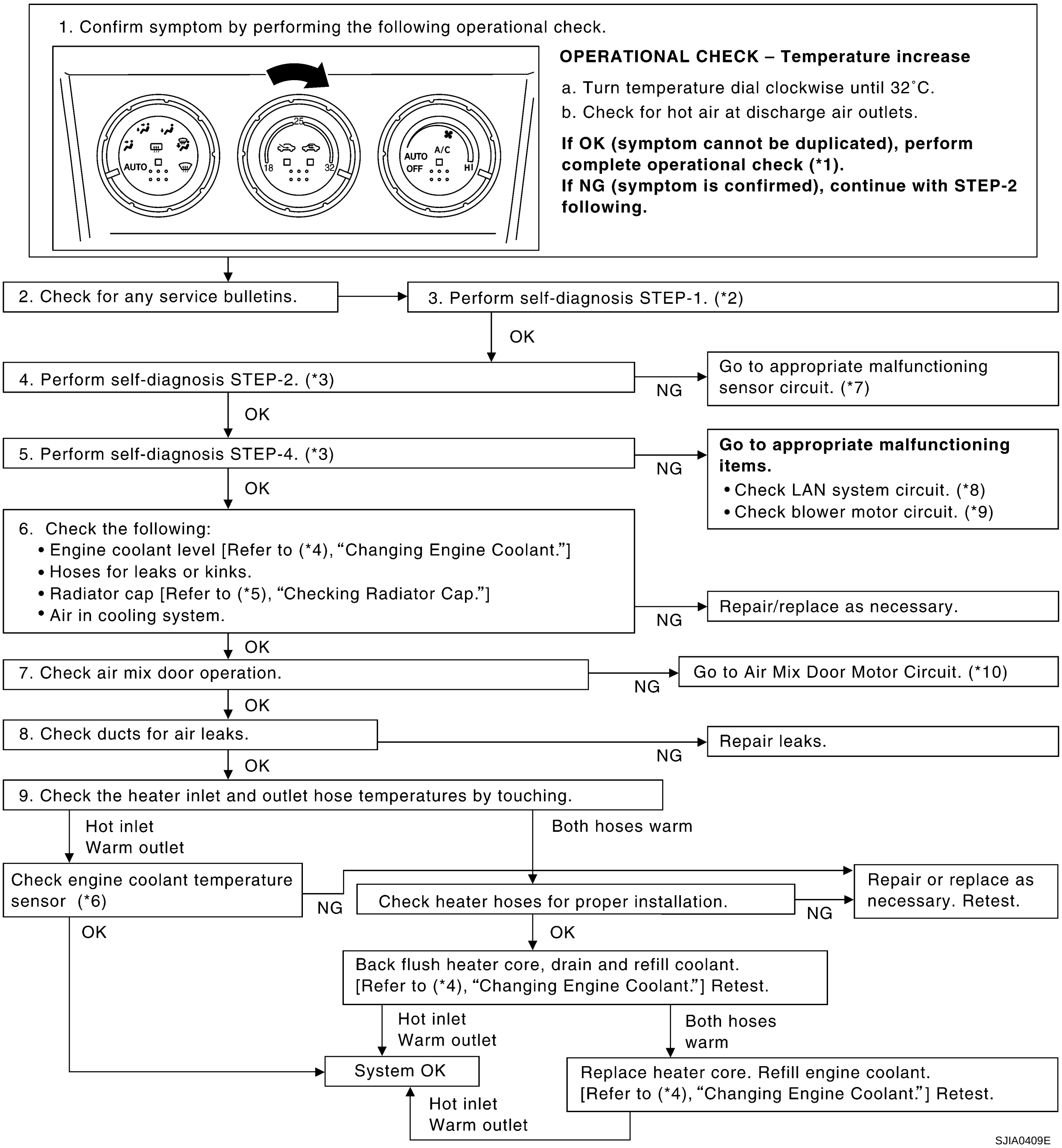

SJIA0409E

*1 ATC-50, "Operational Check"

*2 ATC-44, "FUNCTION CONFIRMATION PROCEDURE", see No. 1.

*3 ATC-44, "FUNCTION CONFIRMATION PROCEDURE", see No. 5 to 7.

*4 CO-8, "Changing Engine Coolant"

*5 CO-12, "Checking Radiator Cap"

*6 EC-201, "DTC P0117, P0118 ECT SENSOR"

*7 ATC-44, "FUNCTION CONFIRMATION PROCEDURE", see No. 9.

*8 ATC-53, "LAN System Circuit"

*9 ATC-65, "Blower Motor Circuit"

*10 ATC-59, "Air Mix Door Motor Circuit"

Noise

AJS001KW

SYMPTOM: Noise

INSPECTION FLOW

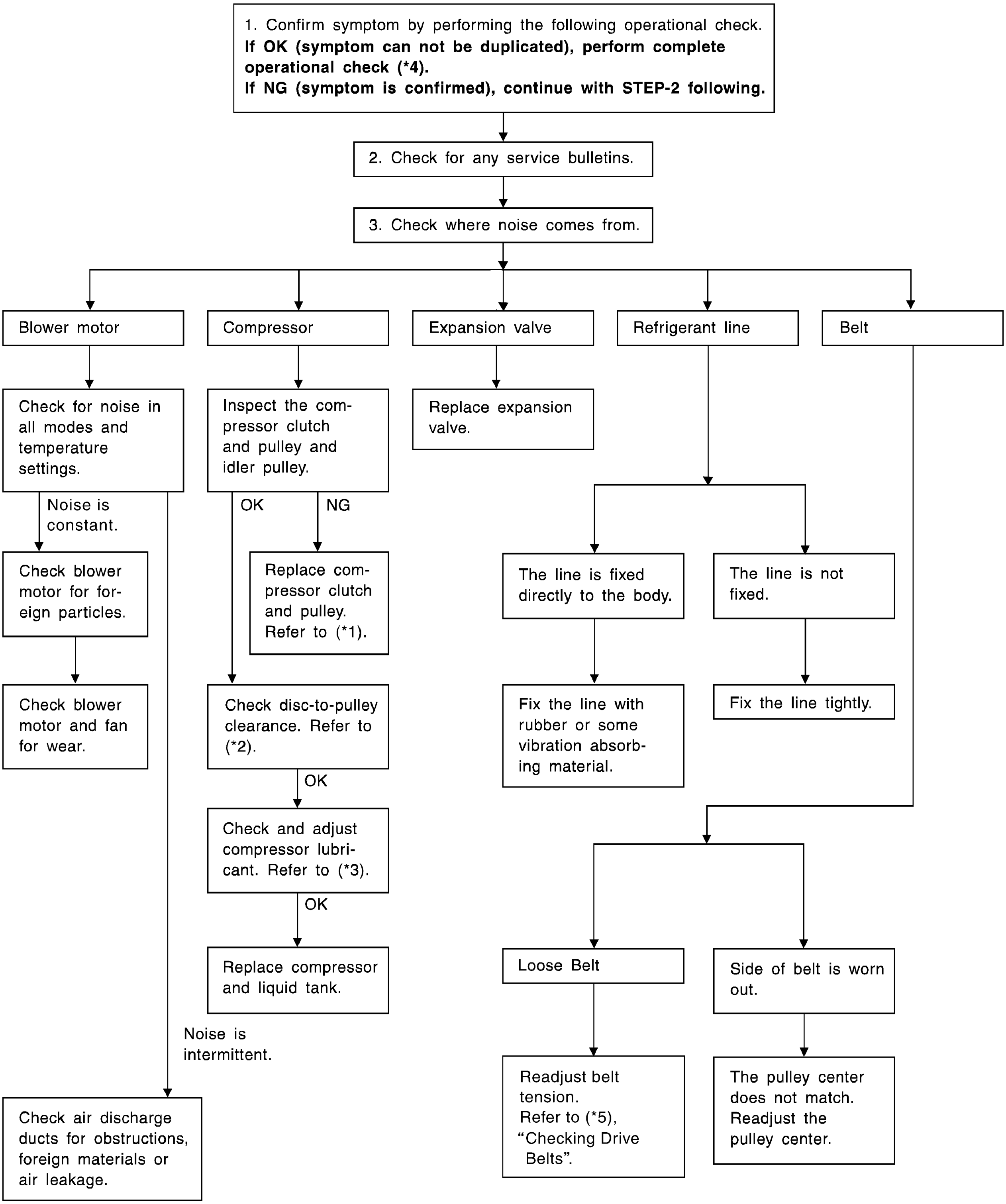

RJIA3108E

*1 Compressor clutch, ATC-123, "REMOVAL" .	*2 Compressor clutch, ATC-125, "INSTALLATION" .	*3 ATC-22, "Maintenance of Lubricant Quantity in Compressor"
*4 ATC-50, "Operational Check"	*5 EM-11, "Checking Drive Belt"	

Self-diagnosis

AJS001KX

SYMPTOM: Self-diagnosis cannot be performed.

INSPECTION FLOW

1. Confirm symptom by performing operational check.

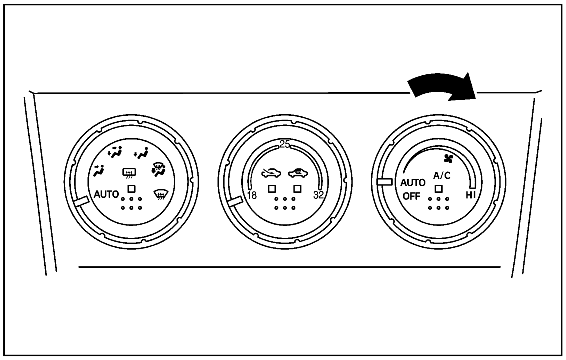

OPERATIONAL CHECK

a. Set mode control dial and fan control dial to AUTO position.

b. Press A/C switch.
Confirm that the compressor clutch engages (sound or visual inspection).
(Discharge air and blower speed will depend on ambient, in-vehicle and set temperatures.)

If OK (symptom cannot be duplicated), perform complete operational check (*1).
If NG (symptom is confirmed), continue with STEP-2 following.

2. Check for any service bulletins.

3. Check Main Power Supply and Ground Circuit. (*2)

OK

Cause cannot be confirmed by self-diagnosis.

If the symptom still exists, perform a complete operational check (*1) and check for other symptoms. [Refer to symptom table, (*3).] Does another symptom exist?

- NO → Replace auto amp. → INSPECTION END
- YES → Go to Trouble Diagnosis for related symptom.

Another symptom exists.

RJIA3109E

*1 ATC-50, "Operational Check" *2 ATC-51, "Power Supply and Ground Circuit for Auto Amp." *3 ATC-32, "SYMPTOM TABLE"

Ambient Sensor Circuit

AJS001KY

COMPONENT DESCRIPTION

Ambient Sensor

The ambient sensor is attached on the hood lock stay. It detects ambient temperature and converts it into a resistance value which is then input into the auto amp.

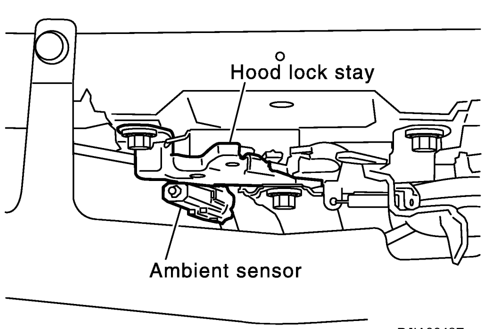

RJIA0048E

AMBIENT TEMPERATURE INPUT PROCESS

The auto amp. includes a processing circuit for the ambient sensor input. However, when the temperature detected by the ambient sensor increases quickly, the processing circuit retards the auto amp. function. It only allows the auto amp. to recognize an ambient temperature increase of 0.33°C (0.6°F) per 100 seconds.

As an example, consider stopping for a few minutes after high speed driving. Although the actual ambient temperature has not changed, the temperature detected by the ambient sensor will increase. This is because the heat from the engine compartment can radiate to the front grille area, location of the ambient sensor.

DIAGNOSIS PROCEDURE FOR AMBIENT SENSOR

SYMPTOM: Ambient sensor circuit is open or shorted.
LED of A/C switch does not illuminate as a result of performing self-diagnosis STEP-2.

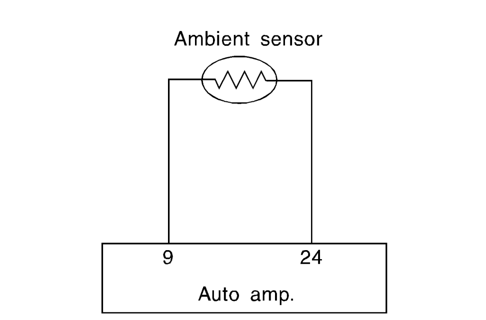

RHA051GD

1. CHECK VOLTAGE BETWEEN AMBIENT SENSOR AND GROUND

1. Disconnect ambient sensor connector.
2. Turn ignition switch ON.
3. Check voltage between ambient sensor harness connector E38 terminal 1 and ground.

1 – Ground : Approx. 5 V

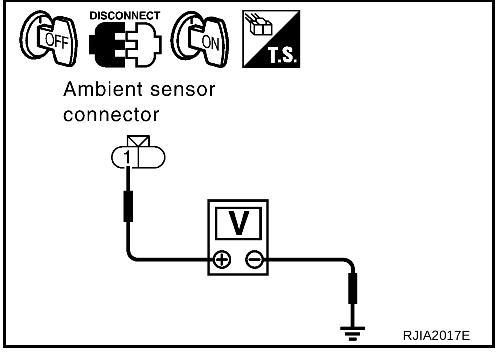

RJIA2017E

OK or NG

OK >> GO TO 2.
NG >> GO TO 4.

2. CHECK CIRCUIT CONTINUITY BETWEEN AMBIENT SENSOR AND AUTO AMP.

1. Turn ignition switch OFF.
2. Disconnect auto amp. connector.
3. Check continuity between ambient sensor harness connector E38 terminal 2 and auto amp. harness connector M53 terminal 24.

2 – 24 : Continuity should exist.

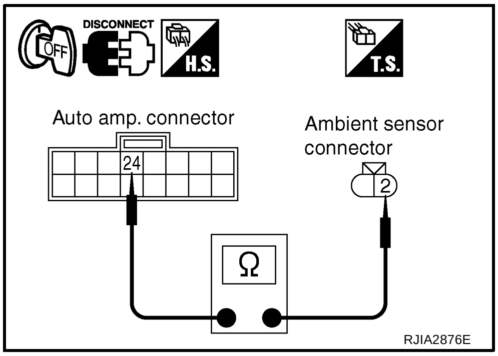

OK or NG

OK >> GO TO 3.
NG >> Repair harness or connector.

3. CHECK AMBIENT SENSOR

Refer to ATC-90, "Ambient Sensor" .

OK or NG

OK >> 1. Replace auto amp.
2. Go to self-diagnosis ATC-44, "FUNCTION CONFIRMATION PROCEDURE" and perform self-diagnosis STEP-2.

NG >> 1. Replace ambient sensor.
2. Go to self-diagnosis ATC-44, "FUNCTION CONFIRMATION PROCEDURE" and perform self-diagnosis STEP-2.

4. CHECK CIRCUIT CONTINUITY BETWEEN AMBIENT SENSOR AND AUTO AMP.

1. Turn ignition switch OFF.
2. Disconnect auto amp. connector.
3. Check continuity between ambient sensor harness connector E38 terminal 1 and auto amp. harness connector M52 terminal 9.

1 – 9 : Continuity should exist.

4. Check continuity between ambient sensor harness connector E38 terminal 1 and ground.

1 – Ground : Continuity should not exist.

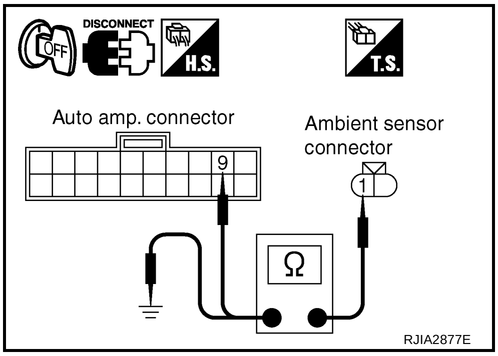

OK or NG

OK >> 1. Replace auto amp.
2. Go to self-diagnosis ATC-44, "FUNCTION CONFIRMATION PROCEDURE" and perform self-diagnosis STEP-2.

NG >> Repair harness or connector.

COMPONENT INSPECTION

Ambient Sensor

After disconnecting ambient sensor connector E38, measure resistance between terminals 2 and 1 at sensor side, using the table below.

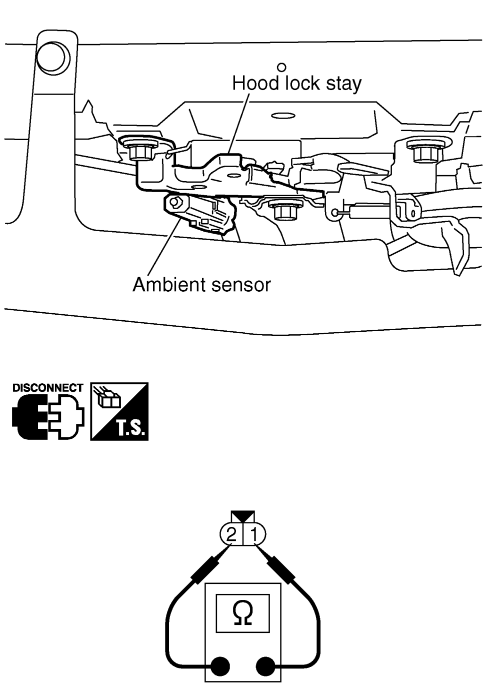

SJIA0433E

Temperature °C (°F)	Resistance kΩ
–15 (5)	12.73
–10 (14)	9.92
–5 (23)	7.80
0 (32)	6.19
5 (41)	4.95
10 (50)	3.99
15 (59)	3.24
20 (68)	2.65
25 (77)	2.19
30 (86)	1.81
35 (95)	1.51
40 (104)	1.27
45 (113)	1.07

If NG, replace ambient sensor.

In-vehicle Sensor Circuit

AJS001KZ

COMPONENT DESCRIPTION

In-vehicle Sensor

The in-vehicle sensor is located on instrument driver lower panel. It converts variations in temperature of compartment air drawn from the aspirator into a resistance value. It is then input into the auto amp.

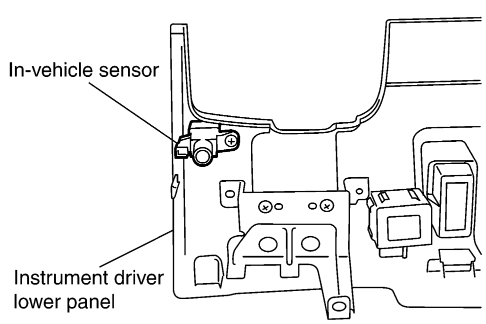

RJIA2841E

Aspirator

The aspirator is located on front side of heater & cooling unit. It produces vacuum pressure due to air discharged from the heater & cooling unit, continuously taking compartment air in the aspirator.

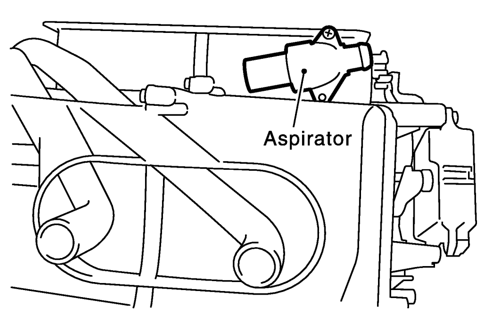

RJIA0557E

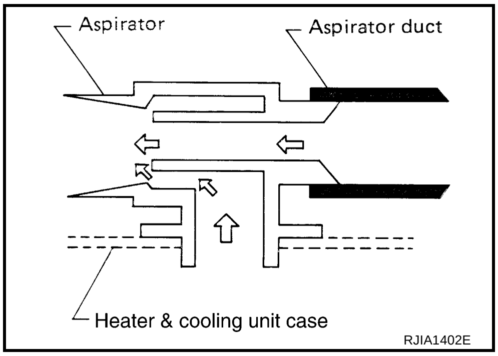

DIAGNOSIS PROCEDURE FOR IN-VEHICLE SENSOR

SYMPTOM: In-vehicle sensor circuit is open or shorted.
LED of A/C switch does not illuminate as a result of performing self-diagnosis STEP-2.

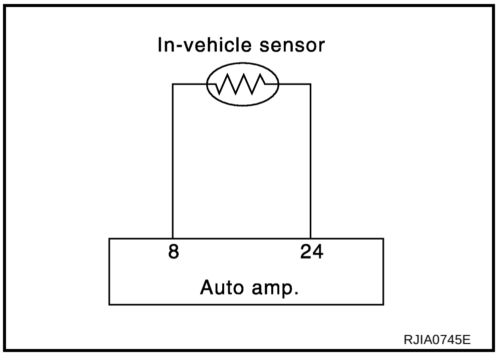

1. CHECK VOLTAGE BETWEEN IN-VEHICLE SENSOR AND GROUND

1. Disconnect in-vehicle sensor connector.
2. Turn ignition switch ON.
3. Check voltage between in-vehicle sensor harness connector M34 terminal 1 and ground.

1 – Ground **: Approx. 5 V**

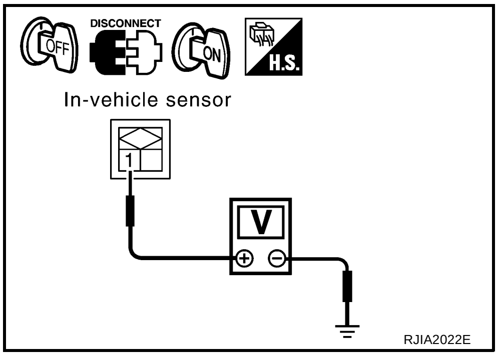

OK or NG

OK >> GO TO 2.
NG >> GO TO 4.

2. CHECK CIRCUIT CONTINUITY BETWEEN IN-VEHICLE SENSOR AND AUTO AMP.

1. Turn ignition switch OFF.
2. Disconnect auto amp. connector.
3. Check continuity between in-vehicle sensor harness connector M34 terminal 2 and auto amp. harness connector M53 terminal 24.

2 – 24 **: Continuity should exist.**

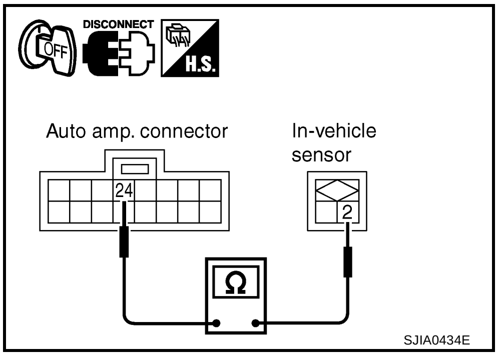

OK or NG

OK >> GO TO 3.
NG >> Repair harness or connector.

3. CHECK IN-VEHICLE SENSOR

Refer to ATC-92, "In-vehicle Sensor" .

OK or NG

OK >> 1. Replace auto amp.
2. Go to self-diagnosis ATC-44, "FUNCTION CONFIRMATION PROCEDURE" and perform self-diagnosis STEP-2.

NG >> 1. Replace in-vehicle sensor.
2. Go to self-diagnosis ATC-44, "FUNCTION CONFIRMATION PROCEDURE" and perform self-diagnosis STEP-2.

4. CHECK CIRCUIT CONTINUITY BETWEEN IN-VEHICLE SENSOR AND AUTO AMP.

1. Turn ignition switch OFF.
2. Disconnect auto amp. connector.
3. Check continuity between in-vehicle sensor harness connector M34 terminal 1 and auto amp. harness connector M52 terminal 8.

1 – 8 : Continuity should exist.

4. Check continuity between in-vehicle sensor harness connector M34 terminal 1 and ground.

1 – Ground : Continuity should not exist.

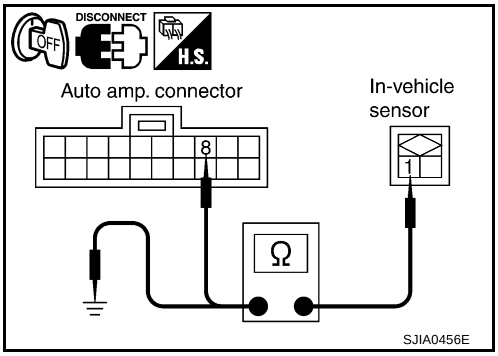

OK or NG

OK >> 1. Replace auto amp.
2. Go to self-diagnosis ATC-44, "FUNCTION CONFIRMATION PROCEDURE" and perform self-diagnosis STEP-2.

NG >> Repair harness or connector.

COMPONENT INSPECTION

In-vehicle Sensor

After disconnecting in-vehicle sensor connector M34, measure resistance between terminals 1 and 2 at sensor side, using the table below.

Temperature °C (°F)	Resistance kΩ
–15 (5)	12.73
–10 (14)	9.92
–5 (23)	7.80
0 (32)	6.19
5 (41)	4.95
10 (50)	3.99
15 (59)	3.24
20 (68)	2.65
25 (77)	2.19
30 (86)	1.81
35 (95)	1.51
40 (104)	1.27
45 (113)	1.07

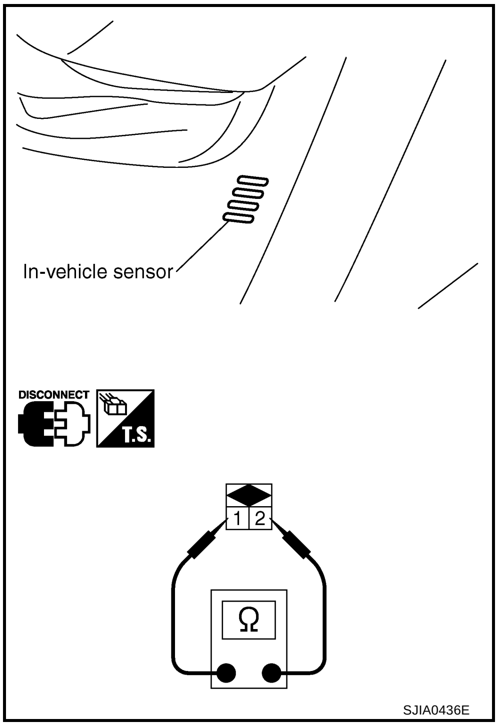

If NG, replace in-vehicle sensor.

Sunload Sensor Circuit

AJS001L0

COMPONENT DESCRIPTION

The sunload sensor is located on the sunload sensor garnish. It detects sunload entering through windshield by means of a photo diode. The sensor converts the sunload into a current value which is then input into the auto amp.

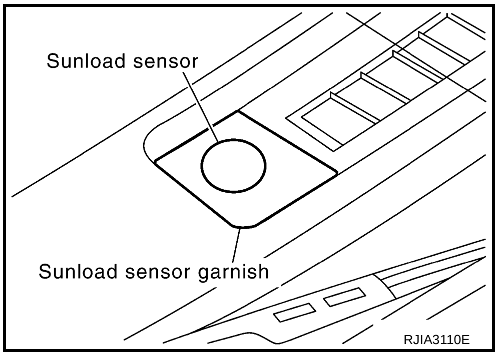

RJIA3110E

SUNLOAD INPUT PROCESS

The auto amp. also includes a processing circuit which averages the variations in detected sunload over a period of time. This prevents drastic swings in the ATC system operation due to small or quick variations in detected sunload.

For example, consider driving along a road bordered by an occasional group of large trees. The sunload detected by the sunload sensor will vary whenever the trees obstruct the sunlight. The processing circuit averages the detected sunload over a period of time, so that the (insignificant) effect of the trees momentarily obstructing the sunlight does not cause any change in the ATC system operation. On the other hand, shortly after entering a long tunnel, the system will recognize the change in sunload, and the system will react accordingly.

DIAGNOSIS PROCEDURE FOR SUNLOAD SENSOR

SYMPTOM: Sunload sensor circuit is open or shorted.
LED of A/C switch does not illuminate as a result of performing self-diagnosis STEP-2.

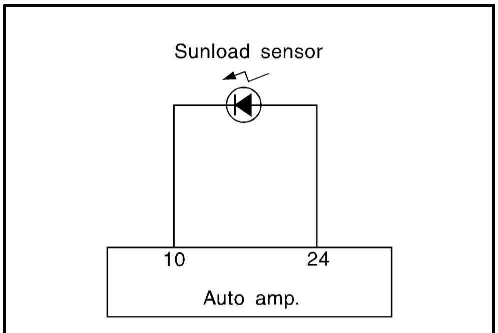

SHA601F

1. CHECK VOLTAGE BETWEEN SUNLOAD SENSOR AND GROUND

1. Disconnect sunload sensor connector.
2. Turn ignition switch ON.
3. Check voltage between sunload sensor harness connector M74 terminal 1 and ground.

1 – Ground **: Approx. 5 V**

OK or NG

OK >> GO TO 2.
NG >> GO TO 4.

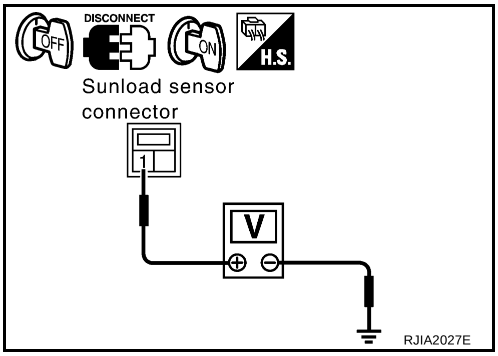

RJIA2027E

A
B
C
D
E
F
G
H
I
ATC
K
L
M

2. CHECK CIRCUIT CONTINUITY BETWEEN SUNLOAD SENSOR AND AUTO AMP.

1. Turn ignition switch OFF.
2. Disconnect auto amp. connector.
3. Check continuity between sunload sensor harness connector M74 terminal 2 and auto amp. harness connector M53 terminal 24.

2 – 24 : Continuity should exist.

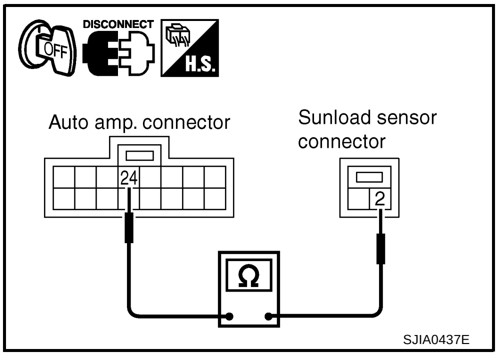

OK or NG

OK >> GO TO 3.
NG >> Repair harness or connector.

3. CHECK SUNLOAD SENSOR.

1. Reconnect sunload sensor connector and auto amp. connector.
2. Refer to ATC-95, "Sunload Sensor" .

OK or NG

OK >> 1. Replace auto amp.
2. Go to self-diagnosis ATC-44, "FUNCTION CONFIRMATION PROCEDURE" and perform self-diagnosis STEP-2.

NG >> 1. Replace sunload sensor.
2. Go to self-diagnosis ATC-44, "FUNCTION CONFIRMATION PROCEDURE" and perform self-diagnosis STEP-2.

4. CHECK CIRCUIT CONTINUITY BETWEEN SUNLOAD SENSOR AND AUTO AMP.

1. Turn ignition switch OFF.
2. Disconnect auto amp. connector.
3. Check continuity between sunload sensor harness connector M74 terminal 1 and auto amp. harness connector M52 terminal 10.

1 – 10 : Continuity should exist.

4. Check continuity between sunload sensor harness connector M74 terminal 1 and ground.

1 – Ground : Continuity should not exist.

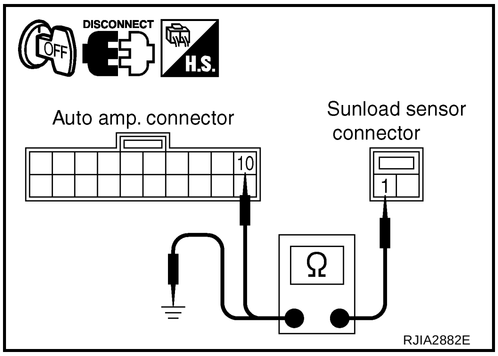

OK or NG

OK >> 1. Replace auto amp.
2. Go to self-diagnosis ATC-44, "FUNCTION CONFIRMATION PROCEDURE" and perform self-diagnosis STEP-2.

NG >> Repair harness or connector.

COMPONENT INSPECTION

Sunload Sensor

Measure voltage between auto amp. harness connector M52 terminal 10 and ground.
If NG, replace sunload sensor.

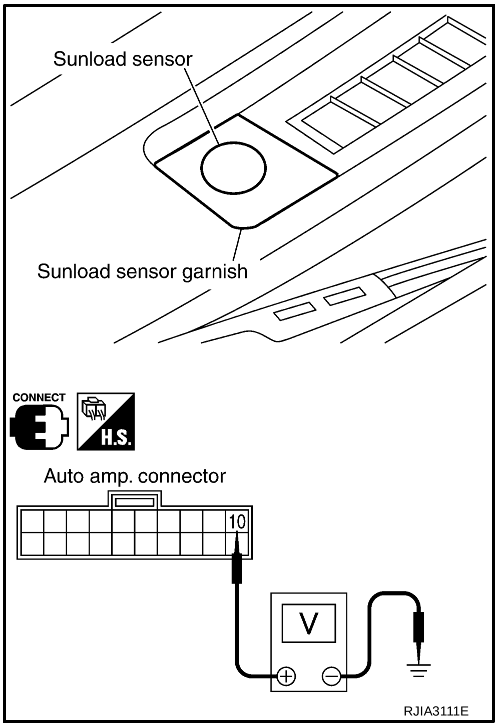

- When checking sunload sensor, select a place where sun shines directly on it.

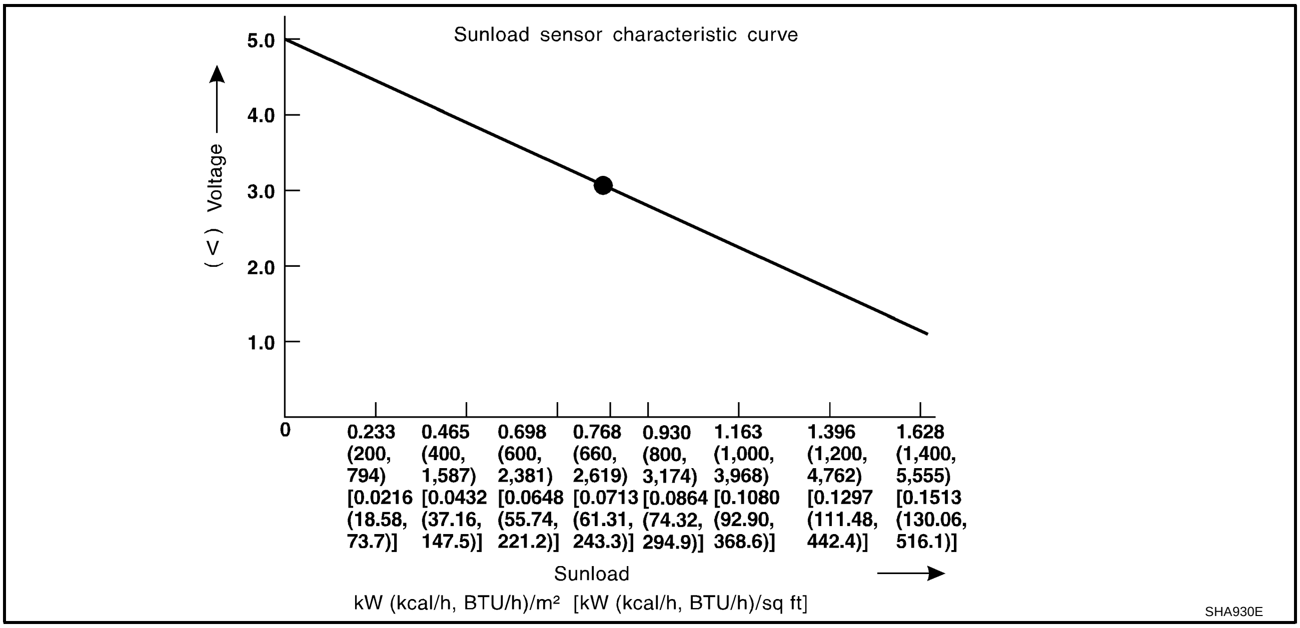

Intake Sensor Circuit

AJS001L1

COMPONENT DESCRIPTION

Intake Sensor

The intake sensor is located on the heater & cooling unit. It converts temperature of air after it passes through the evaporator into a resistance value which is then input to the auto amp.

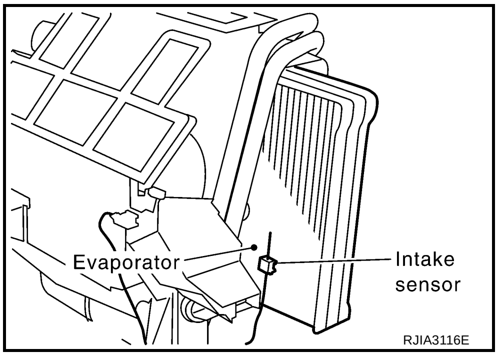

RJIA3116E

DIAGNOSIS PROCEDURE FOR INTAKE SENSOR

SYMPTOM: Intake sensor circuit is open or shorted.
LED of A/C switch does not illuminate as a result of performing self-diagnosis STEP-2.

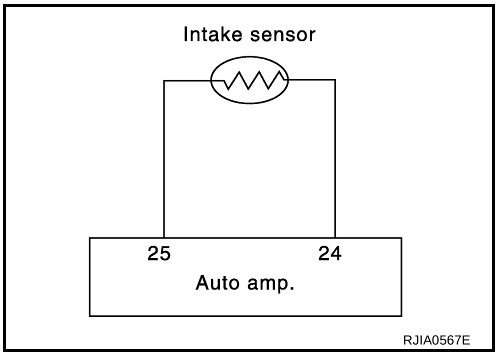

RJIA0567E

1. CHECK VOLTAGE BETWEEN INTAKE SENSOR AND GROUND

1. Disconnect intake sensor connector.
2. Turn ignition switch ON.
3. Check voltage between intake sensor harness connector M68 terminal 1 and ground.

1 – Ground : Approx. 5 V

OK or NG

OK >> GO TO 2.
NG >> GO TO 4.

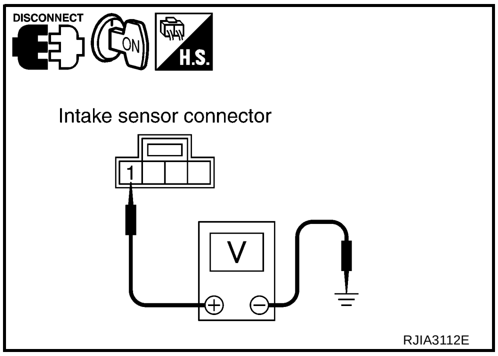

RJIA3112E

2. CHECK CIRCUIT CONTINUITY BETWEEN INTAKE SENSOR AND AUTO AMP.

1. Turn ignition switch OFF.
2. Disconnect auto amp. connector.
3. Check continuity between intake sensor harness connector M68 terminal 2 and auto amp. harness connector M53 terminal 24.

2 – 24 : Continuity should exist.

OK or NG

OK >> GO TO 3.
NG >> Repair harness or connector.

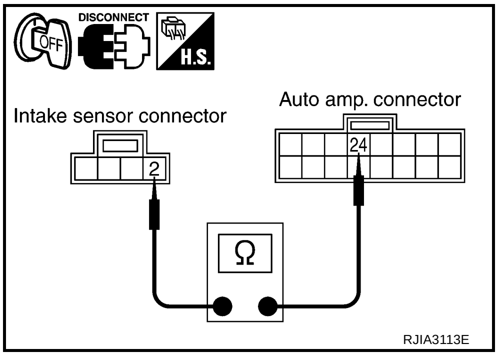

RJIA3113E

3. CHECK INTAKE SENSOR

Refer to ATC-97, "Intake Sensor" .

OK or NG

OK >> 1. Replace auto amp.
2. Go to self-diagnosis ATC-44, "FUNCTION CONFIRMATION PROCEDURE" and perform self-diagnosis STEP-2.

NG >> 1. Replace intake sensor.
2. Go to self-diagnosis ATC-44, "FUNCTION CONFIRMATION PROCEDURE" and perform self-diagnosis STEP-2.

4. CHECK CIRCUIT CONTINUITY BETWEEN INTAKE SENSOR AND AUTO AMP.

1. Turn ignition switch OFF.
2. Disconnect auto amp. connector.
3. Check continuity between intake sensor harness connector M68 terminal 1 and auto amp. harness connector M53 terminal 25.

1 – 25 : Continuity should exist.

4. Check continuity between intake sensor harness connector M68 terminal 1 and ground.

1 – Ground : Continuity should not exist.

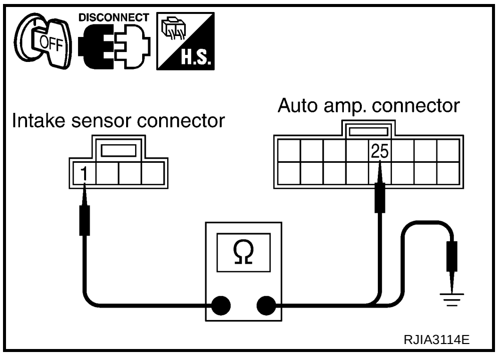

OK or NG

OK >> 1. Replace auto amp.
2. Go to self-diagnosis ATC-44, "FUNCTION CONFIRMATION PROCEDURE" and perform self-diagnosis STEP-2.

NG >> Repair harness or connector.

COMPONENT INSPECTION

Intake Sensor

After disconnecting intake sensor connector M68, measure resistance between terminals 1 and 2 at sensor side, using the table below.

Temperature °C (°F)	Resistance kΩ
–15 (5)	12.34
–10 (14)	9.62
–5 (23)	7.56
0 (32)	6.00
5 (41)	4.80
10 (50)	3.87
15 (59)	3.15
20 (68)	2.57
25 (77)	2.12
30 (86)	1.76
35 (95)	1.47
40 (104)	1.23
45 (113)	1.04

If NG, replace intake sensor.

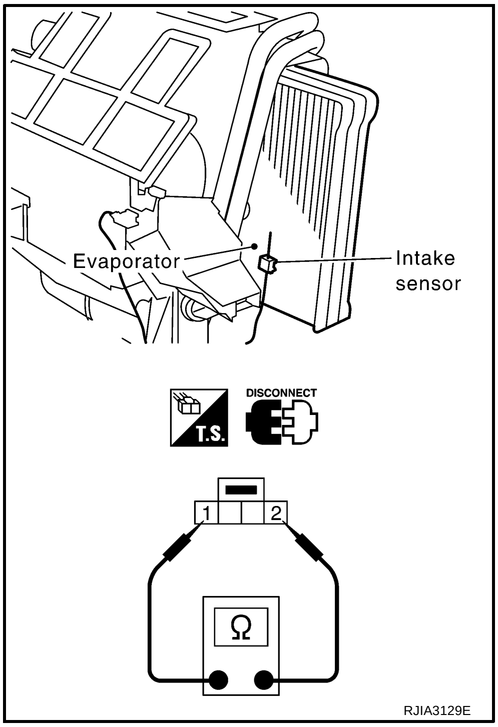

CONTROLLER

PFP:27500

Removal and Installation

AJS001L2

REMOVAL

1. Remove cluster lid C. Refer to IP-11, "Removal and Installation" .
2. Remove mounting screws, and then remove controller.

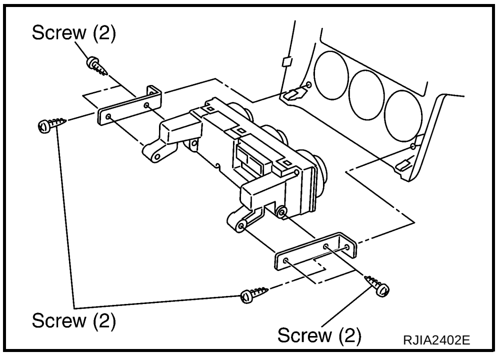

INSTALLATION

Installation is basically the reverse order of removal.

AMBIENT SENSOR

PFP:27722

Removal and Installation

AJS001L3

REMOVAL

1. Remove front grille. Refer to EI-18, "FRONT GRILLE" .
2. Disconnect ambient sensor connector, and then remove ambient sensor.

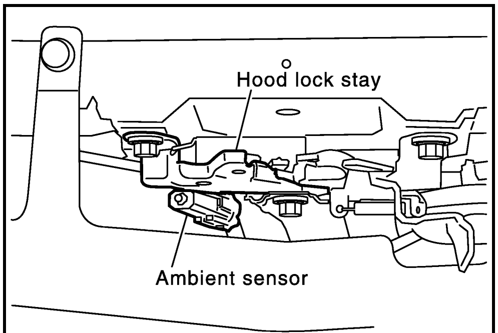

RJIA0048E

INSTALLATION

Installation is basically the reverse order of removal.

IN-VEHICLE SENSOR

PFP:27720

Removal and Installation

AJS001L4

REMOVAL

1. Remove instrument driver lower panel. Refer to IP-11, "Removal and Installation" .
2. Remove mounting screw, and then remove in-vehicle sensor.

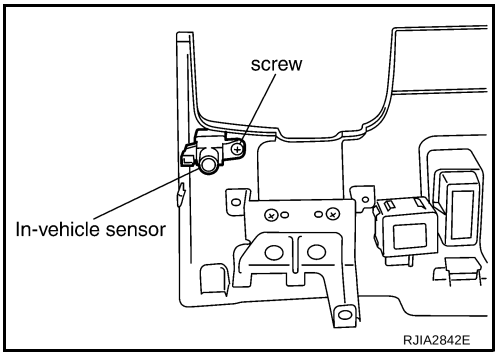

INSTALLATION

Installation is basically the reverse order of removal.

SUNLOAD SENSOR

PFP:27721

Removal and Installation

AJS001L5

REMOVAL

1. Remove sunload sensor garnish.
2. Disconnect sunload sensor connector, and then remove sunload sensor.

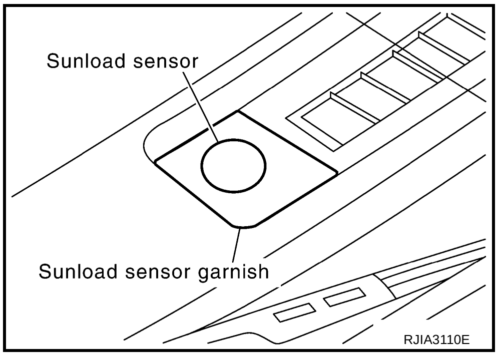

INSTALLATION

Installation is basically the reverse order of removal.

INTAKE SENSOR

PFP:27723

Removal and Installation

AJS001L6

REMOVAL

1. Remove evaporator. Refer to ATC-130, "Removal and Installation of Evaporator" .
2. Remove intake sensor.

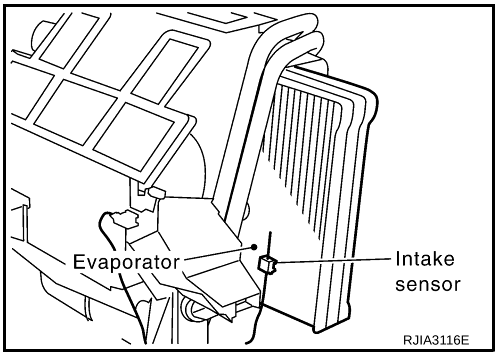

INSTALLATION

Installation is basically the reverse order of removal.

CAUTION:

- **Replace O-rings for A/C piping with new ones, and then apply compressor oil to it when installing it.**
- **Mark the mounting position of intake sensor bracket.**
- **When recharging refrigerant, check for leaks.**

BLOWER UNIT

PFP:27200

Removal and Installation

AJS001L7

REMOVAL

1. Remove glove box, glove box cover and instrument passenger lower panel. Refer to IP-11, "Removal and Installation" .
2. Remove NAVI control unit. Refer to AV-63, "Removal and Installation of NAVI Control Unit" .
3. Remove ECM mounting bolt, and then remove ECM with ECM bracket attached.
4. Remove instrument panel mounting screw.
5. Remove blower unit mounting bolt and screws.
6. Disconnect blower motor connector and fan control amp. connector.

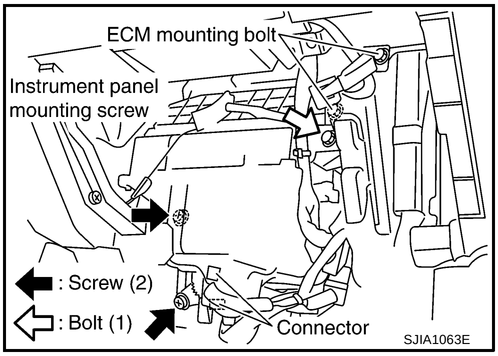

7. Disconnect intake door motor connector, and then remove harness clips.
8. Remove blower unit.

   CAUTION:
   Slide the blower unit toward the right, remove location pins (2 parts), and then move it downward.

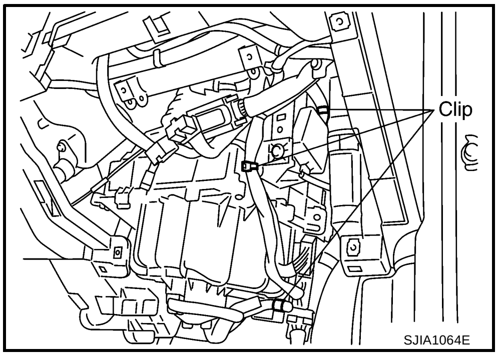

INSTALLATION

Installation is basically the reverse order of removal.

CAUTION:
Make sure location pins (2 parts) are securely installed.

Disassembly and Assembly

AJS001L8

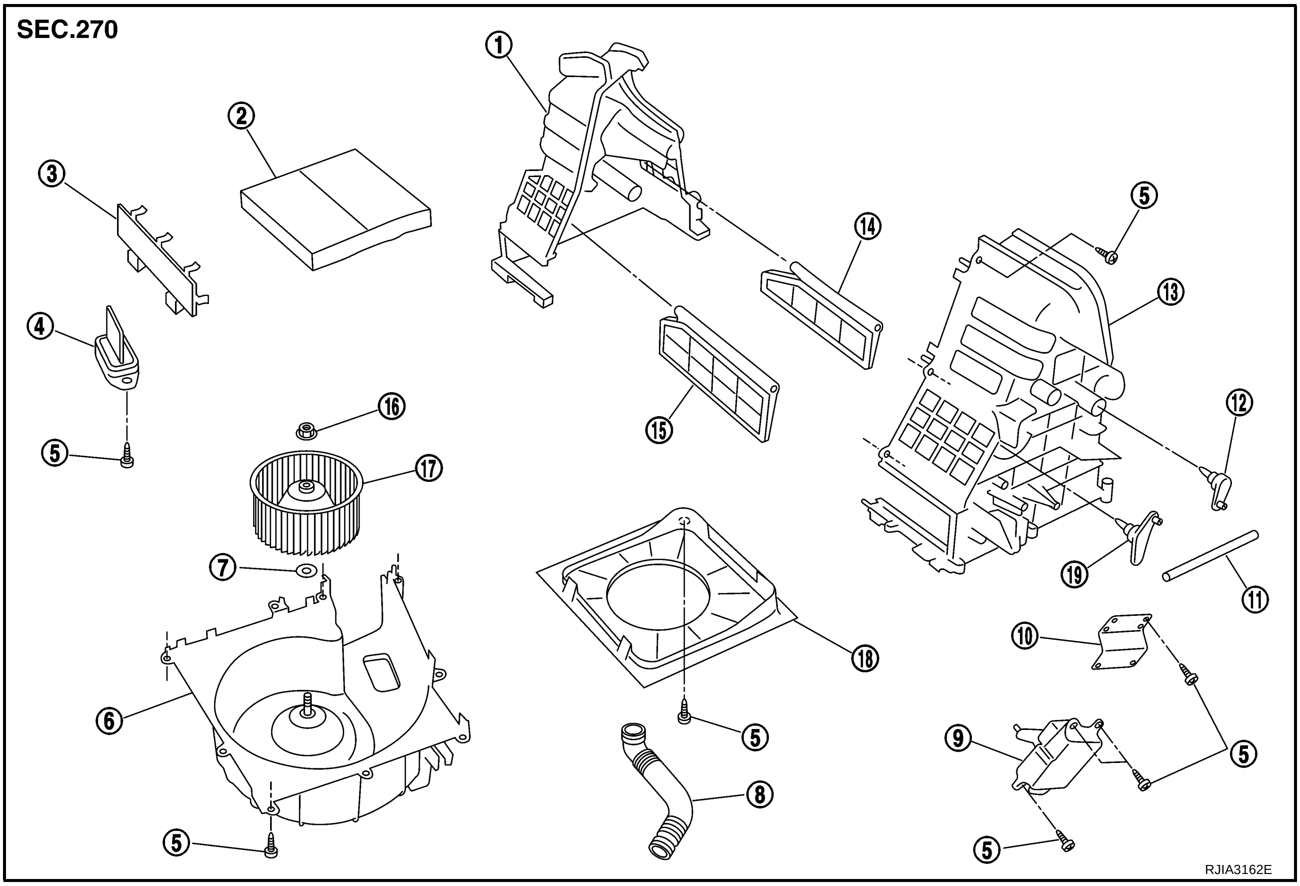

1. Upper case 2	2. In-cabin microfilter	3. Filter cover
4. Fan control amp.	5. Screw	6. Blower fan motor assembly
7. Washer	8. Cooling hose	9. Intake door motor
10. Motor bracket	11. Intake door link	12. Intake door lever 2
13. Upper case 1	14. Intake door 2	15. Intake door 1
16. Nut	17. Blower fan	18. Bell mouth
19. Intake door lever 1		

CAUTION:

If retaining tabs are damaged while disassembling blower unit, use 9 screws (27111-2Y000) to assemble blower unit.

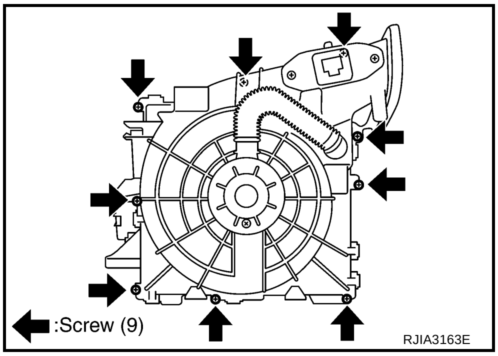

BLOWER MOTOR

PFP:27226

Removal and Installation

AJS001L9

REMOVAL

1. Remove blower unit. Refer to ATC-103, "BLOWER UNIT" .
2. Separate blower motor from blower unit.

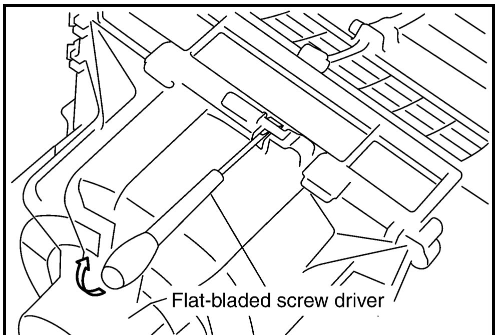

RJIA3164E

3. Remove cooling hose, fan control amp. and blower fan.

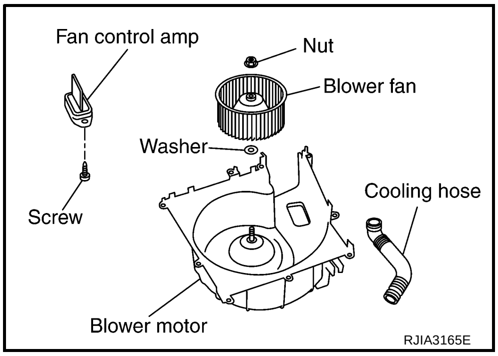

RJIA3165E

INSTALLATION

Installation is basically the reverse order of removal.

CAUTION:

If retaining tabs are damaged while disassembling blower unit, use 9 screws (27111-2Y000) to assemble blower unit.

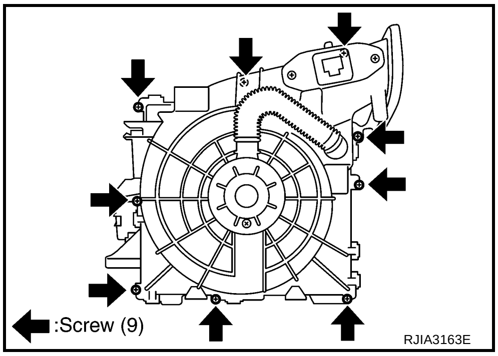

RJIA3163E

INTAKE DOOR MOTOR

PFP:27730

Removal and Installation

AJS001LA

REMOVAL

1. Remove blower unit. Refer to ATC-103, "BLOWER UNIT" .
2. Remove mounting screws, and then remove intake door motor from blower unit.

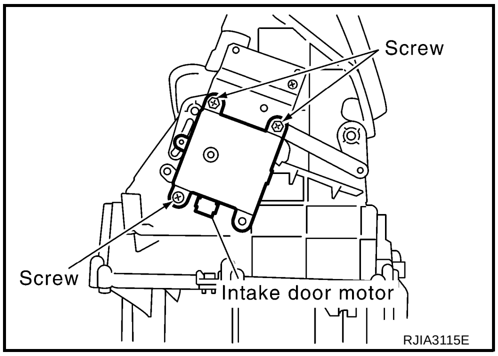

INSTALLATION

Installation is basically the reverse order of removal.

FAN CONTROL AMPLIFIER

PFP:27761

Removal and Installation

AJS001LB

REMOVAL

1. Remove blower unit. Refer to ATC-103, "BLOWER UNIT" .
2. Remove mounting screws, and then remove fan control amp.

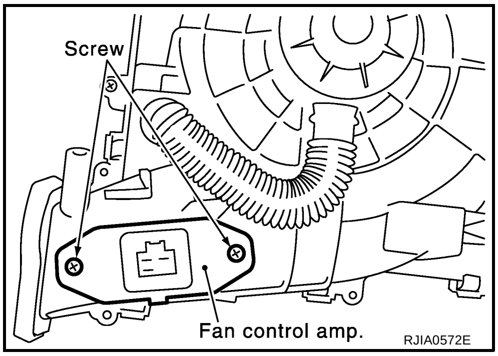

INSTALLATION

Installation is basically the reverse order of removal.

IN-CABIN MICROFILTER

PFP:27277

Removal and Installation

AJS001LC

FUNCTION

Air inside passenger compartment is kept clean at either recirculation or fresh mode by installing in-cabin microfilter into blower unit.

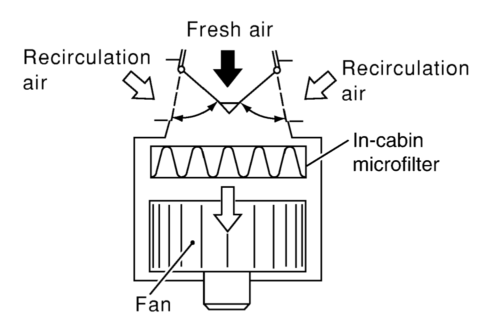

RJIA3117E

REPLACEMENT TIMING

Replace in-cabin microfilter.
Refer to MA-8, "CHASSIS AND BODY MAINTENANCE" in Schedule 1 and MA-9, "CHASSIS AND BODY MAINTENANCE" Schedule 2.
Caution label is fixed inside glove box.

REPLACEMENT PROCEDURES

1. Remove glove box and glove box cover. Refer to IP-11, "Removal and Installation" .
2. Remove filter cover.
3. Take out in-cabin microfilter from blower unit.
4. Replace with new one and reinstall on blower unit.
5. Reinstall glove box and glove box cover.

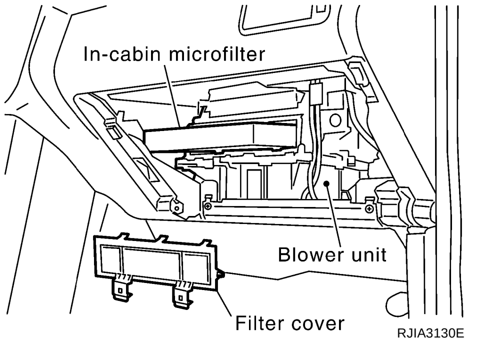

RJIA3130E

HEATER & COOLING UNIT ASSEMBLY

PFP:27110

Removal and Installation

AJS001LD

REMOVAL

1. Use a refrigerant collecting equipment (for HFC-134a) to discharge the refrigerant.
2. Drain coolant from cooling system. Refer to CO-8, "Changing Engine Coolant" .
3. Disconnect two heater hoses from heater core pipe.
4. Remove mounting bolt from low-pressure flexible hose.

   CAUTION:

   Cap or wrap the joint of the pipe with suitable material such as vinyl tape to avoid the entry of air.
5. Remove blower unit. Refer to ATC-103, "BLOWER UNIT" .

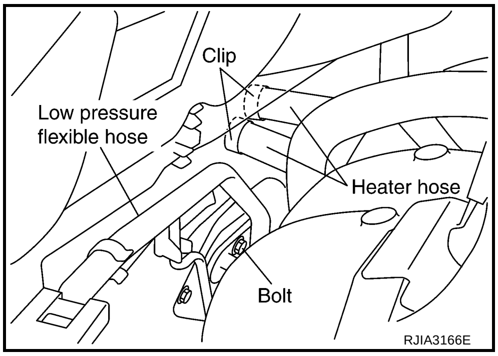

RJIA3166E

6. Remove instrument panel. Refer to IP-11, "Removal and Installation" .
7. Remove clips of vehicle harness from steering member.
8. Remove mounting nuts, and then remove instrument stay.

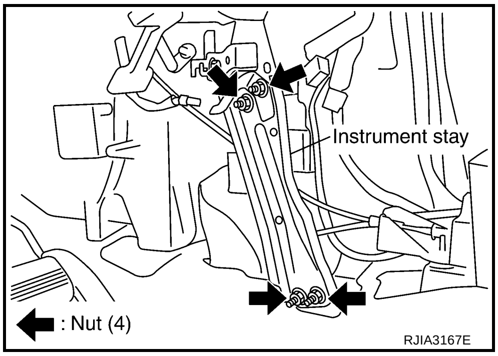

RJIA3167E

9. Remove mounting bolts from heater & cooling unit.

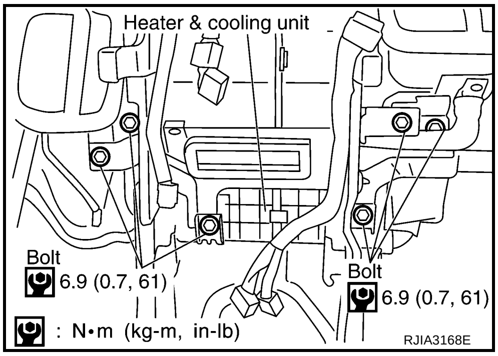

RJIA3168E

10. Remove steering member.

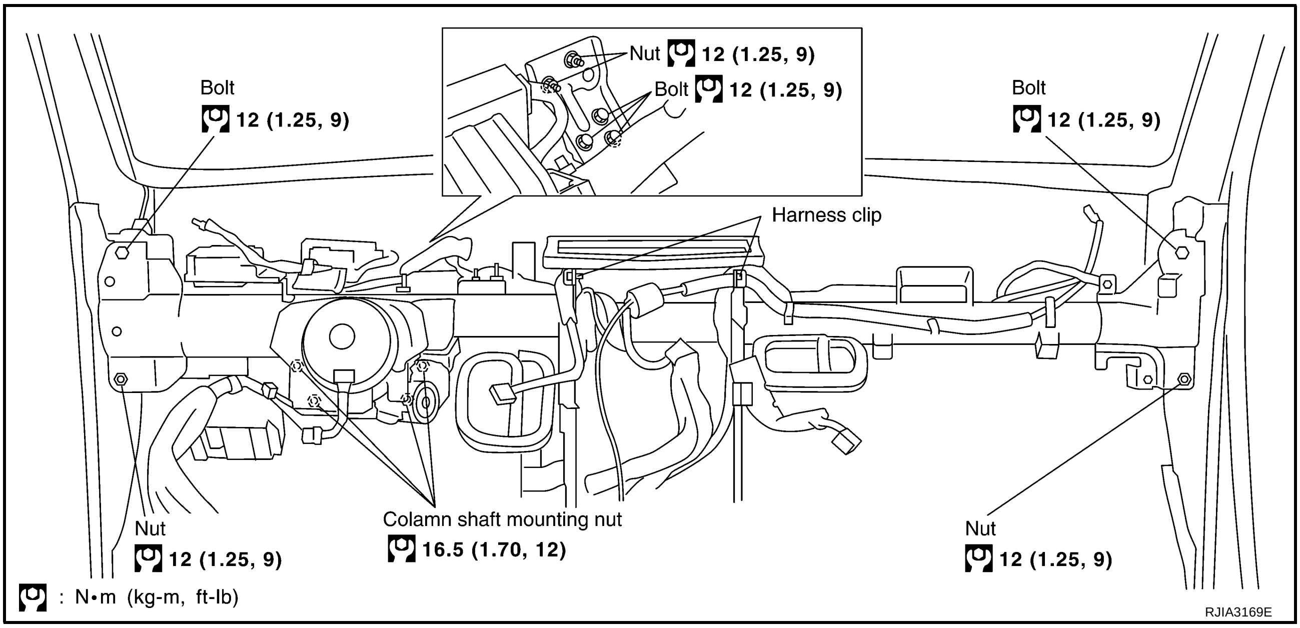

11. Remove heater & cooling unit assembly.

INSTALLATION

Installation is basically the reverse order of removal.

CAUTION:

- **Replace O-rings of low-pressure flexible hose and high-pressure pipe with new ones, and then apply compressor oil to it when installing it.**
- **When recharging refrigerant, check for leaks.**

NOTE:

- When filling radiator with coolant, refer to CO-8, "Changing Engine Coolant" .
- Recharge the refrigerant.

Disassembly and Assembly

AJS001LE

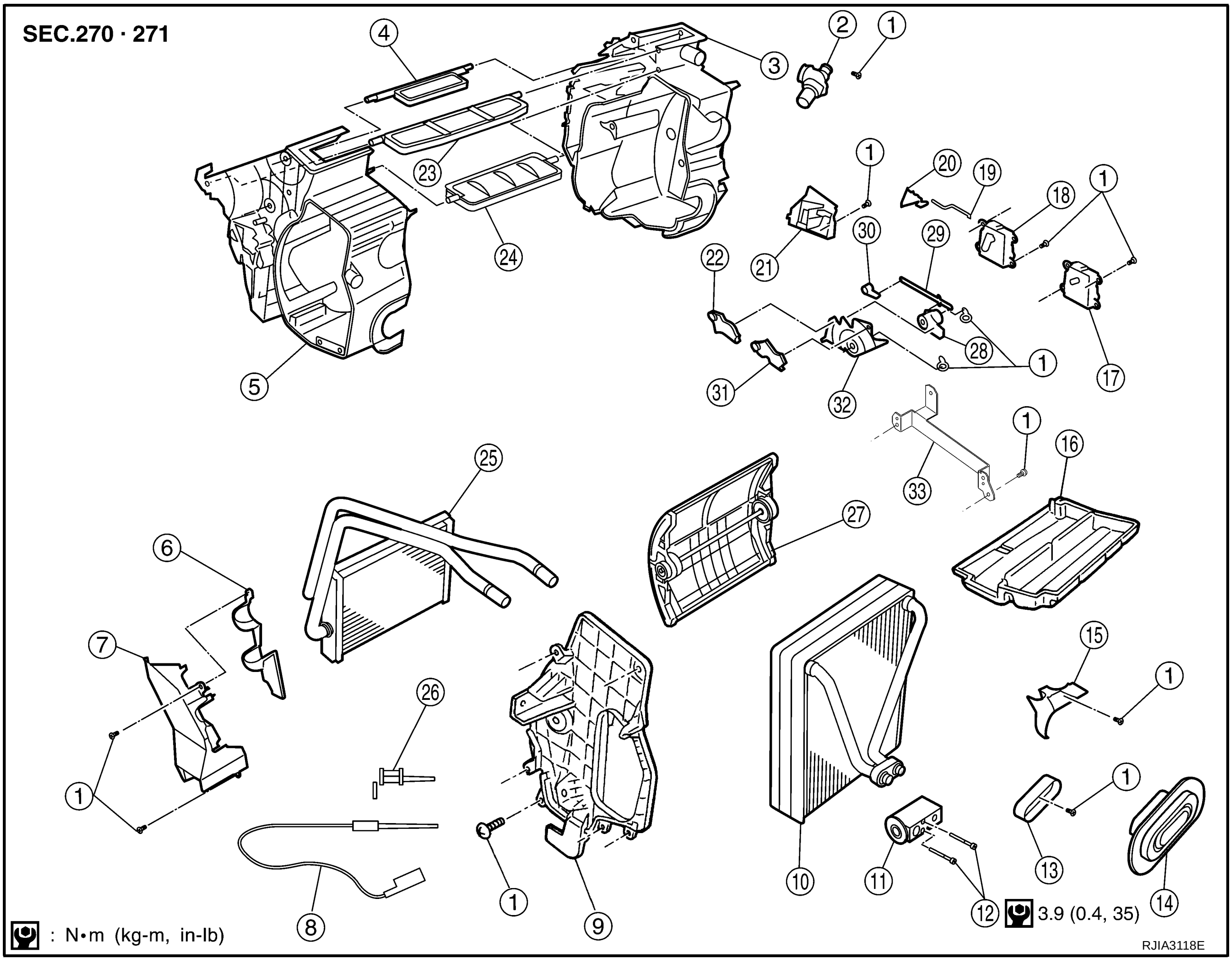

1.	Screw	2.	Aspirator	3.	Heater & cooling unit case (left)
4.	Defroster door	5.	Heater & cooling unit case (right)	6.	Heater core cover
7.	Foot duct (right)	8.	Intake sensor	9.	Evaporator cover
10.	Evaporator	11.	Expansion valve	12.	Bolt
13.	Expansion valve cover	14.	Cooler grommet	15.	Heater pipe support
16.	Insulator	17.	Air mix door motor	18.	Mode door motor
19.	Rod	20.	Rod holder	21.	Foot duct (left)
22.	Defroster door lever	23.	Ventilator door	24.	Max. cool door
25.	Heater core	26.	Intake sensor bracket	27.	Slide door unit (Air mix door)
28.	Ventilator door link 2	29.	Ventilator door link 1	30.	Ventilator door lever
31.	Max. cool door lever	32.	Main link	33.	Harness bracket

MODE DOOR MOTOR

PFP:27731

Removal and Installation

AJS001LF

REMOVAL

1. Remove rod from rod holder.
2. Remove mounting screws, and then remove mode door motor.
3. Disconnect mode door motor connector.

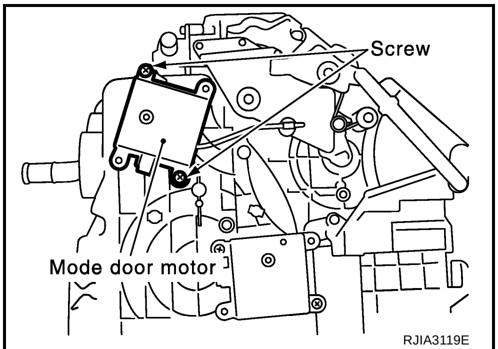

RJIA3119E

INSTALLATION

1. Reconnect mode door motor connector.
2. Install mode door motor.
3. Turn ignition switch ON.
4. Turn mode control dial to VENT position.
5. Turn side link clockwise, and then install rod to rod holder.

AIR MIX DOOR MOTOR

PFP:27732

Removal and Installation

AJS001LG

REMOVAL

1. Set the temperature control dial at 18°C, and then disconnect the battery cable from the negative terminal.
2. Disconnect air mix door motor connector.
3. Remove mounting screws, and then remove air mix door motor.

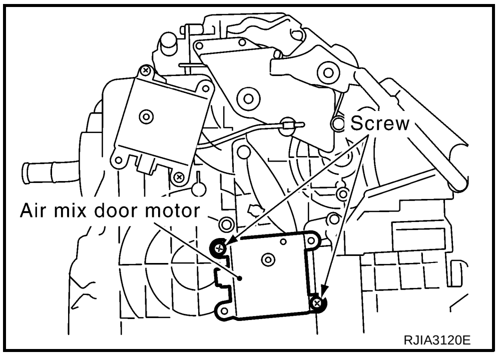

INSTALLATION

Installation is basically the reverse order of removal.

HEATER CORE

PFP:27140

Removal and Installation

AJS001LH

REMOVAL

1. Remove heater & cooling unit assembly. Refer to ATC-109, "HEATER & COOLING UNIT ASSEMBLY" .
2. Remove heater pipe support.
3. Remove mounting screws, and then remove foot duct and heater core cover.
4. Remove heater core from heater & cooling unit assembly.

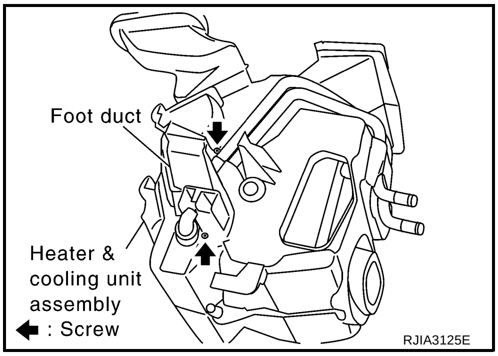

INSTALLATION

Installation is basically the reverse order of removal.

DUCTS AND GRILLES

PFP:27860

Removal and Installation

AJS001LI

REMOVAL

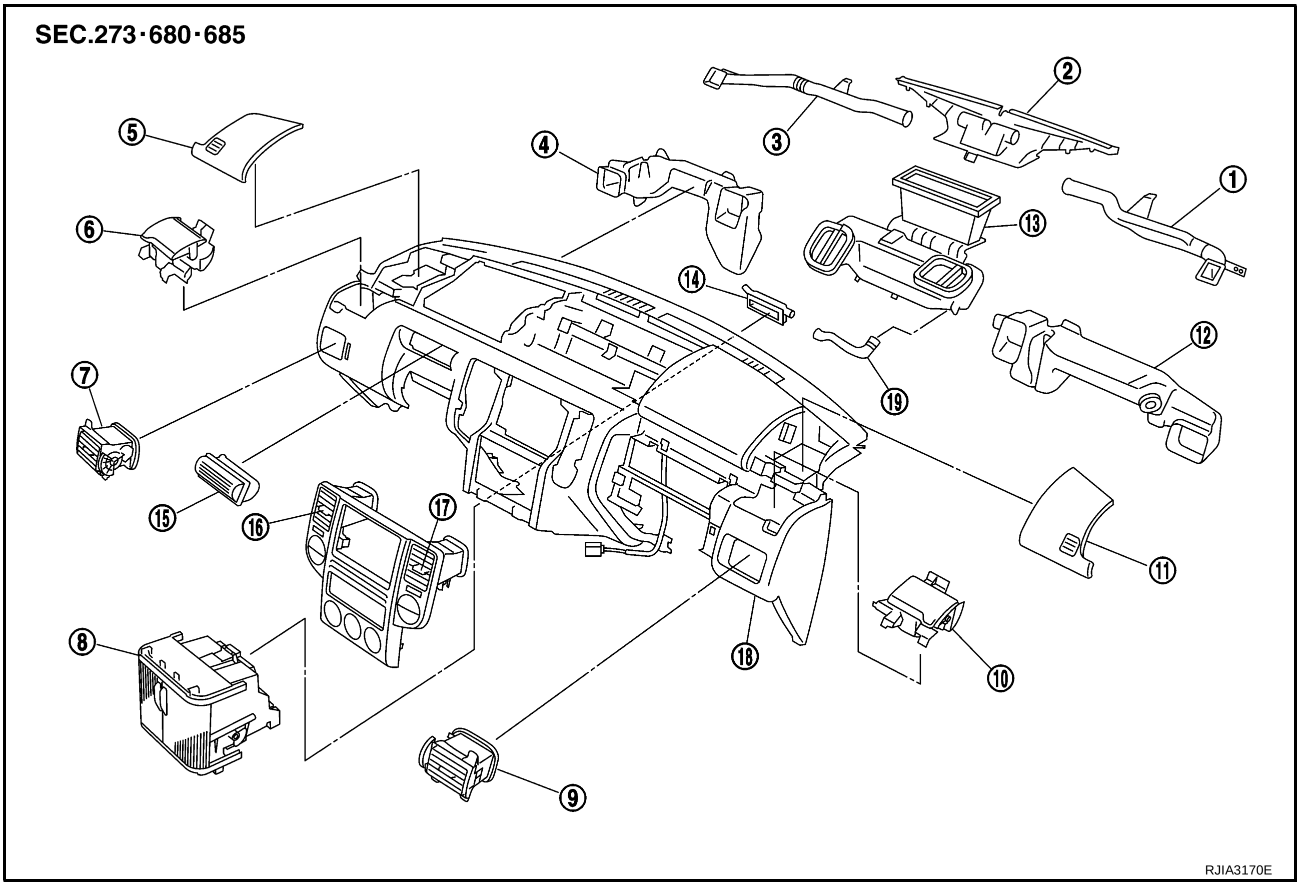

1. Side defroster duct (right)	2. Defroster nozzle	3. Side defroster duct (left)
4. Side ventilator duct (left)	5. Front speaker grille (left)	6. Cup holder (left)
7. Side ventilator grille (left)	8. Multi-box (Instrument center lower panel)	9. Side ventilator grille (right)
10. Cup holder (right)	11. Front speaker grille (right)	12. Side ventilator duct (right)
13. Adaptor	14. Multi-box duct 2	15. Driver ventilator grille
16. Center ventilator grille (left)	17. Center ventilator grille (right)	18. Instrument panel
19. Multi-box duct 1		

Removal of Center Ventilator Grilles

1. Remove cluster lid C. Refer to IP-11, "Removal and Installation" .
2. Remove mounting clips, and then remove center ventilator grilles.

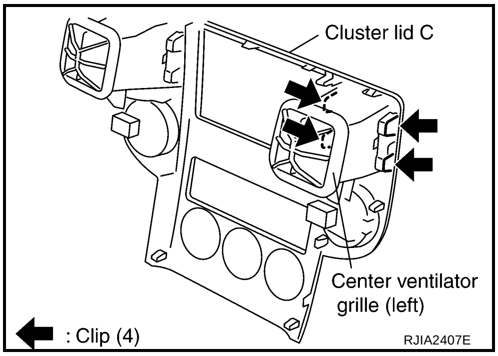

Removal of Side Ventilator Grilles

1. Remove instrument panel. Refer to IP-11, "Removal and Installation" .
2. Remove side ventilator ducts. Refer to ATC-116, "Removal of Defroster Nozzle, Ducts and Side Ventilator Ducts" .
3. Remove mounting screws, and then remove side ventilator grilles.

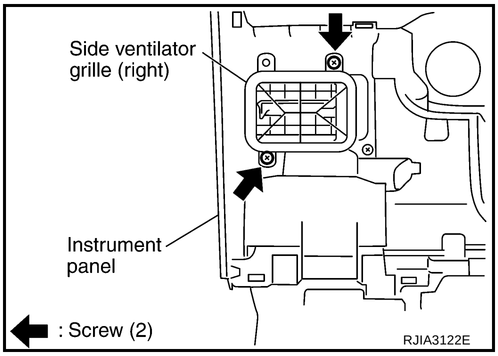

Removal of Driver Ventilator Grille

1. Remove instrument panel. Refer to IP-11, "Removal and Installation" .
2. Remove side ventilator duct (left). Refer to ATC-116, "Removal of Defroster Nozzle, Ducts and Side Ventilator Ducts" .
3. Remove mounting screws, and then remove driver ventilator grille.

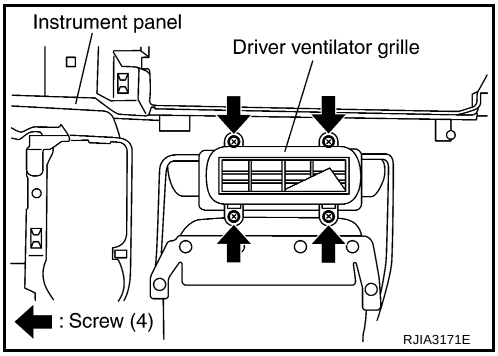

Removal of Defroster Nozzle, Ducts and Side Ventilator Ducts

1. Remove instrument panel. Refer to IP-11, "Removal and Installation" .
2. Remove mounting screws, and then remove side defroster ducts with defroster nozzle.

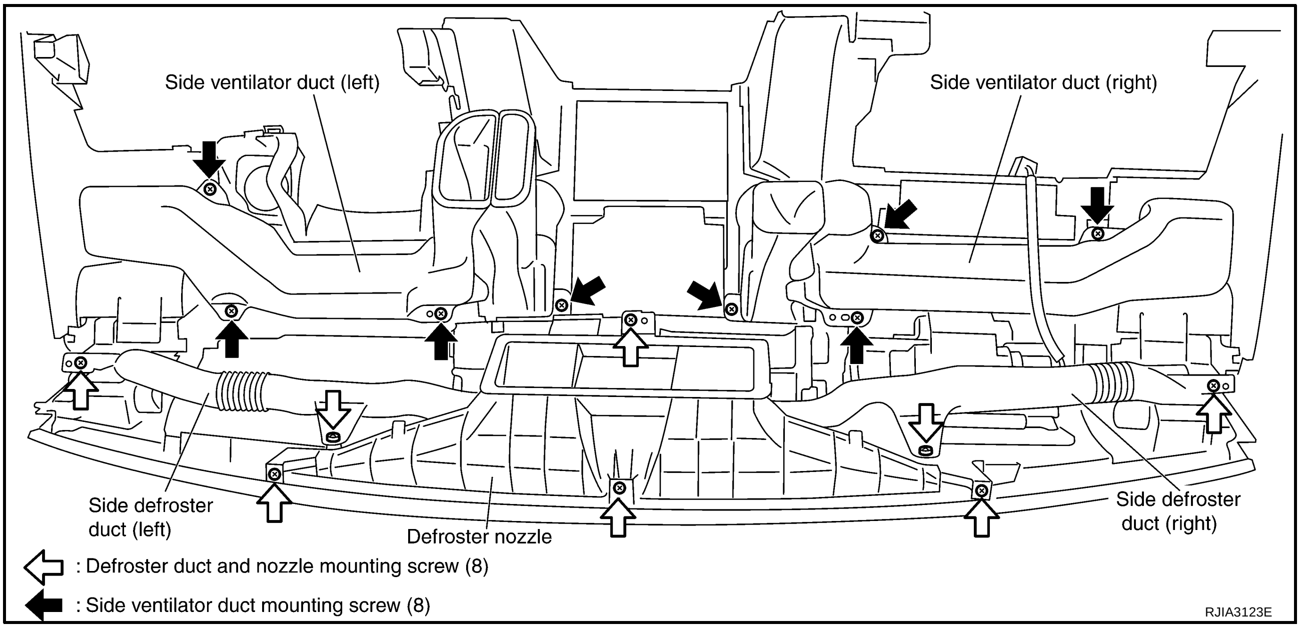

3. Remove mounting screws, and then remove side ventilator ducts.

Removal of Adaptor

1. Remove heater & cooling unit assembly. Refer to ATC-109, "HEATER & COOLING UNIT ASSEMBLY" .

2. Remove mounting screw and clip.
3. Slide adaptor toward vehicle front, and then remove adaptor.

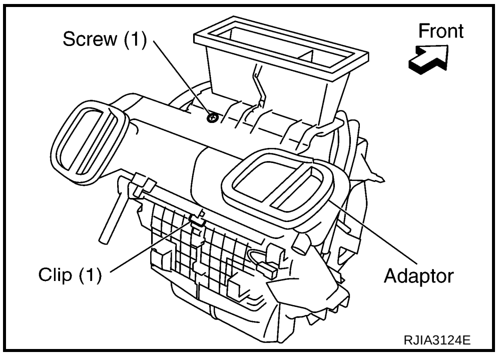

Removal of Multi-box Duct

1. Remove instrument panel. Refer to IP-11, "Removal and Installation" .
2. Remove mounting screws, and then disconnect multi-box duct from heater & cooling unit assembly.
3. Remove mounting bolts, and then remove heater & cooling unit bracket (right).
4. Remove multi-box duct from passenger side.

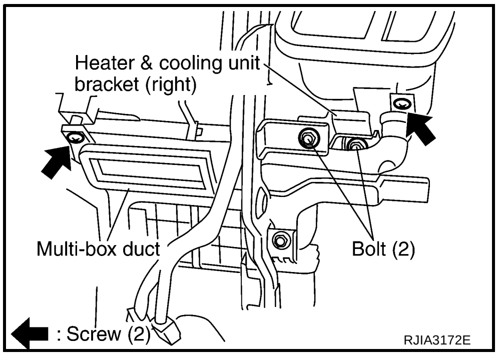

Removal of Foot Duct

1. Remove multi-box duct. Refer to ATC-117, "Removal of Multi-box Duct" .
2. Remove mounting screws, and then remove foot duct.

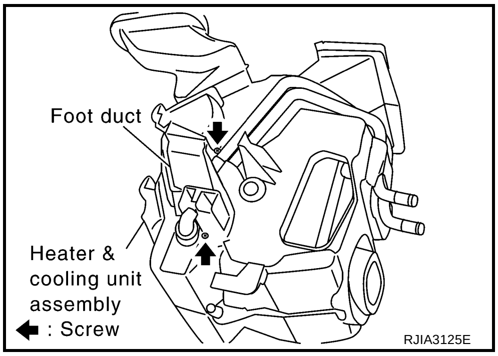

Removal of Floor Ducts

1. Remove front seats. Refer to SE-17, "FRONT SEAT" .
2. Remove multi-box (Instrument center lower panel). Refer to IP-11, "Removal and Installation" .
3. Peel back the floor trim to a point where the floor duct is visible.
4. Remove mounting bolts and clips, and then remove rear floor ducts.

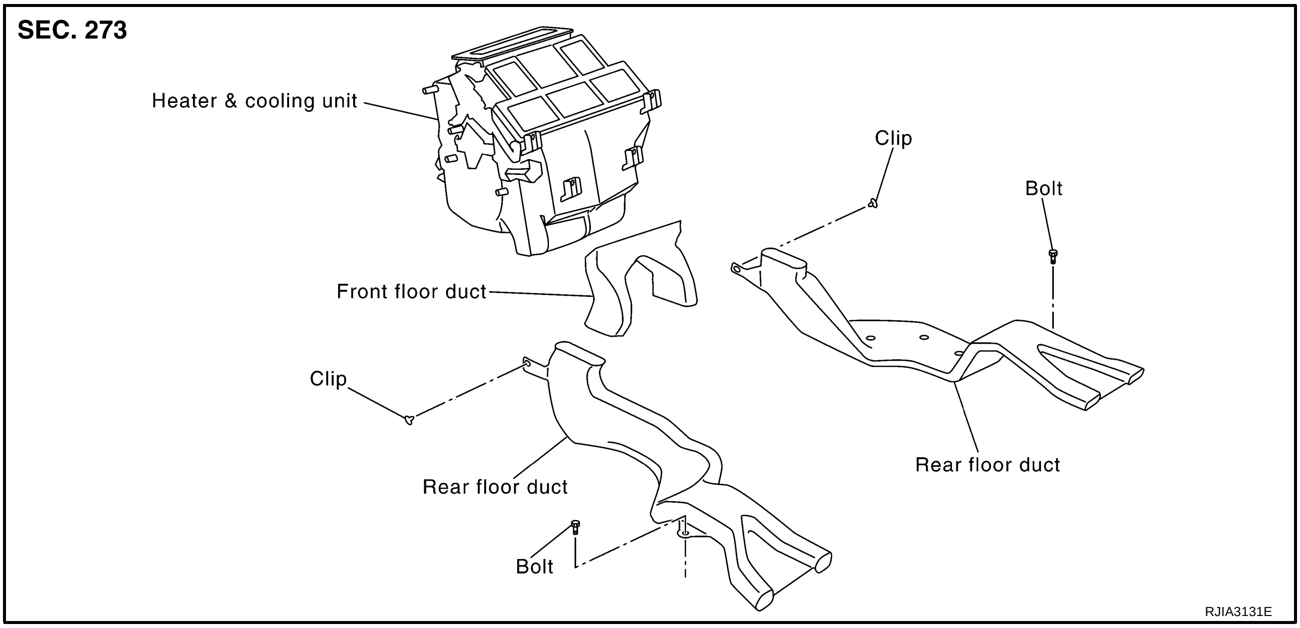

5. Remove mounting clips, and then remove front floor duct.

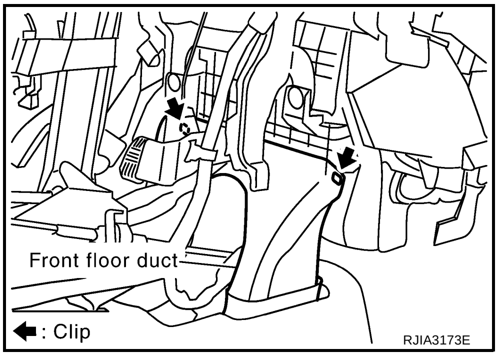

INSTALLATION

Installation is basically the reverse order of removal.

REFRIGERANT LINES

PFP:92600

HFC-134a (R-134a) Service Procedure

AJS001LJ

SETTING OF SERVICE TOOLS AND EQUIPMENT

Discharging Refrigerant

WARNING:

Avoid breathing A/C refrigerant and lubricant vapor or mist. Exposure may irritate eyes, nose and throat. Remove HFC-134a (R-134a) from A/C system, using certified service equipment meeting requirements of SAE J-2210 [HFC-134a (R-134a) recycling equipment] or J-2209 [HFC-134a (R-134a) recovery equipment]. If accidental system discharge occurs, ventilate work area before resuming service. Additional health and safety information may be obtained from refrigerant and lubricant manufacturers.

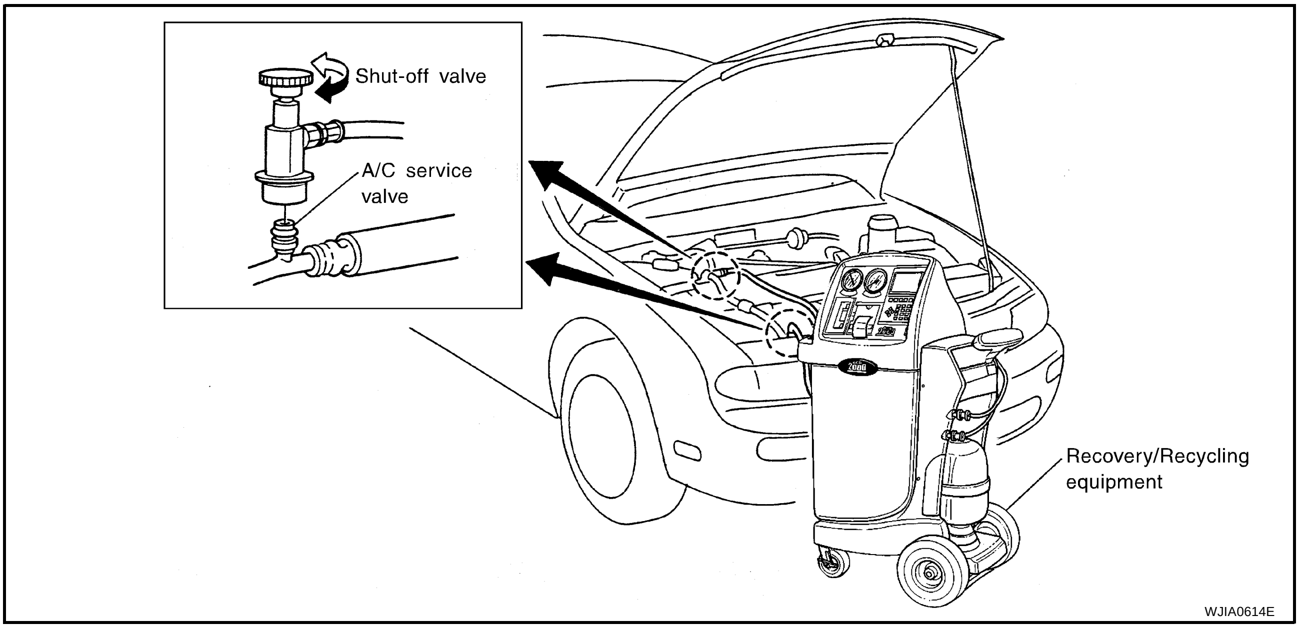

WJIA0614E

Evacuating System and Charging Refrigerant

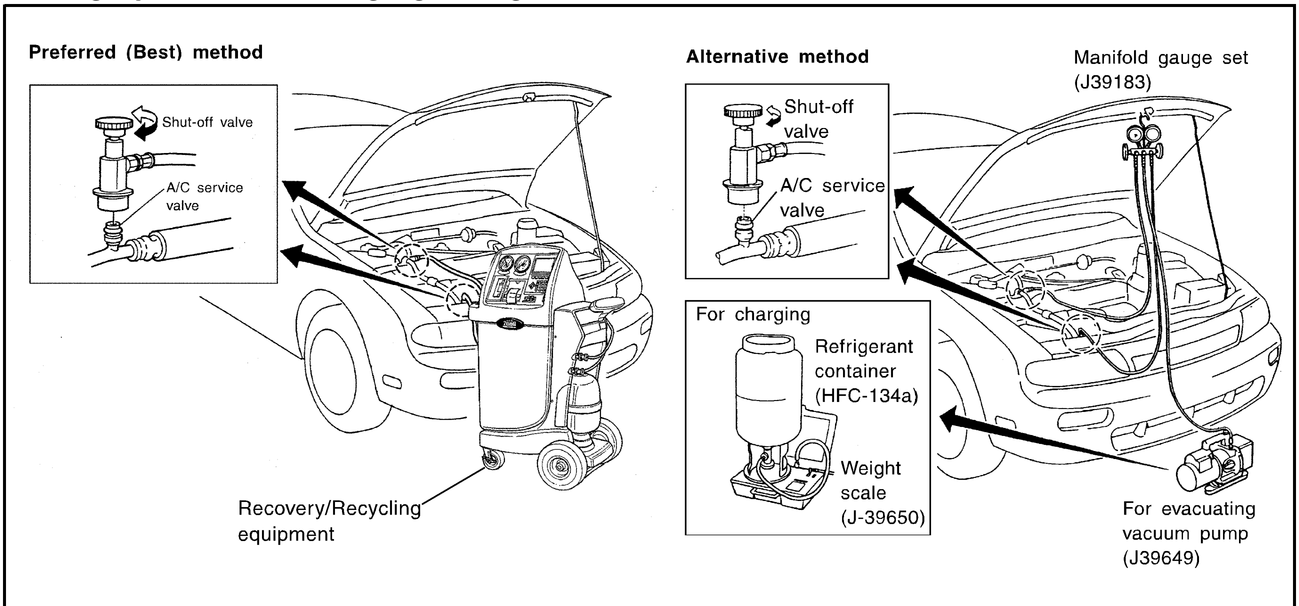

WJIA0615E

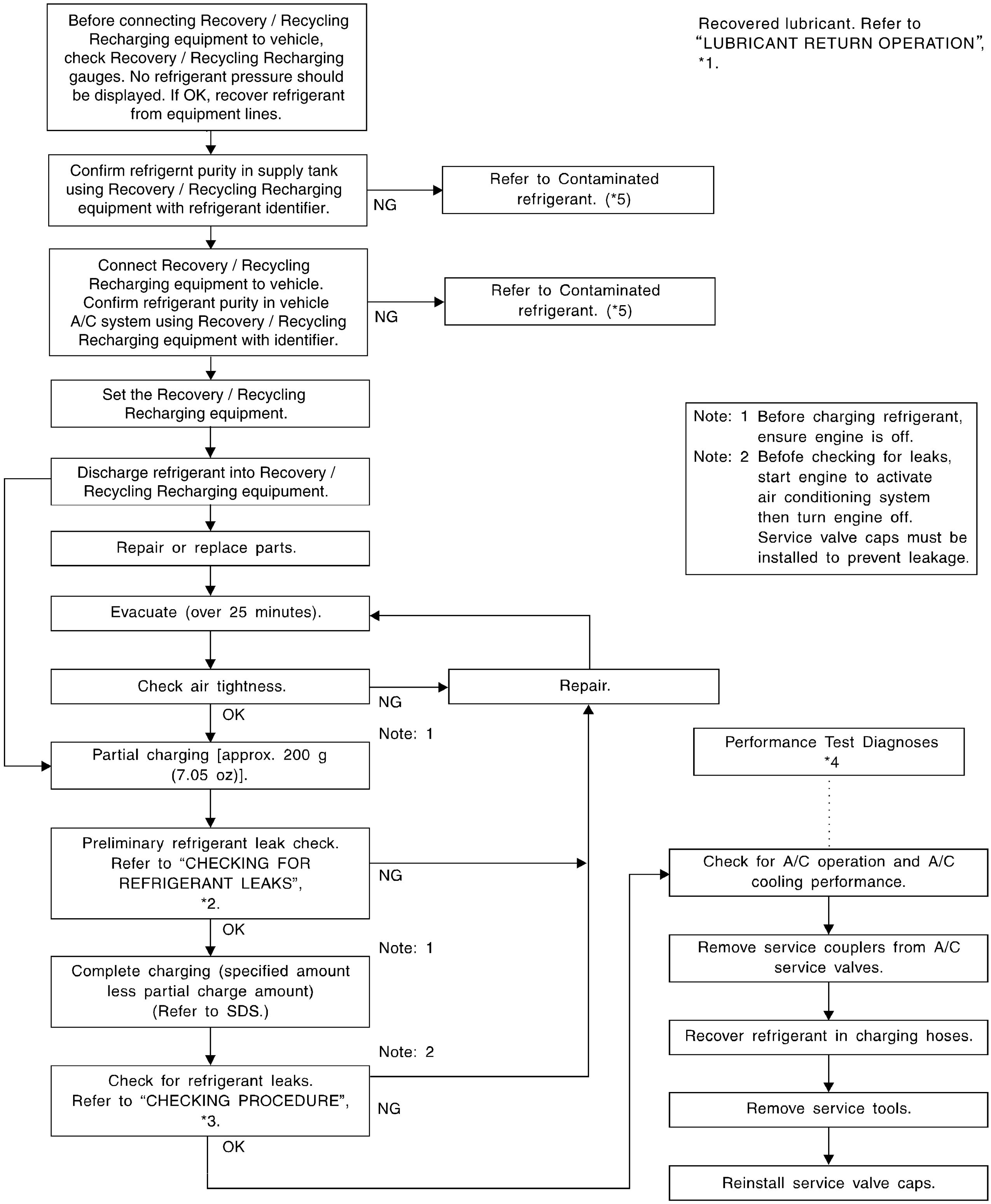

RJIA3006E

*1 ATC-22, "LUBRICANT RETURN OPERATION"
*2 ATC-132, "Checking for Refrigerant Leaks"
*3 ATC-134, "CHECKING PROCEDURE"
*4 ATC-79, "PERFORMANCE TEST DIAGNOSIS"
*5 ATC-5, "CONTAMINATED REFRIGERANT"

Components

AJS001LK

Refer to ATC-6, "Precautions for Refrigerant Connection" .

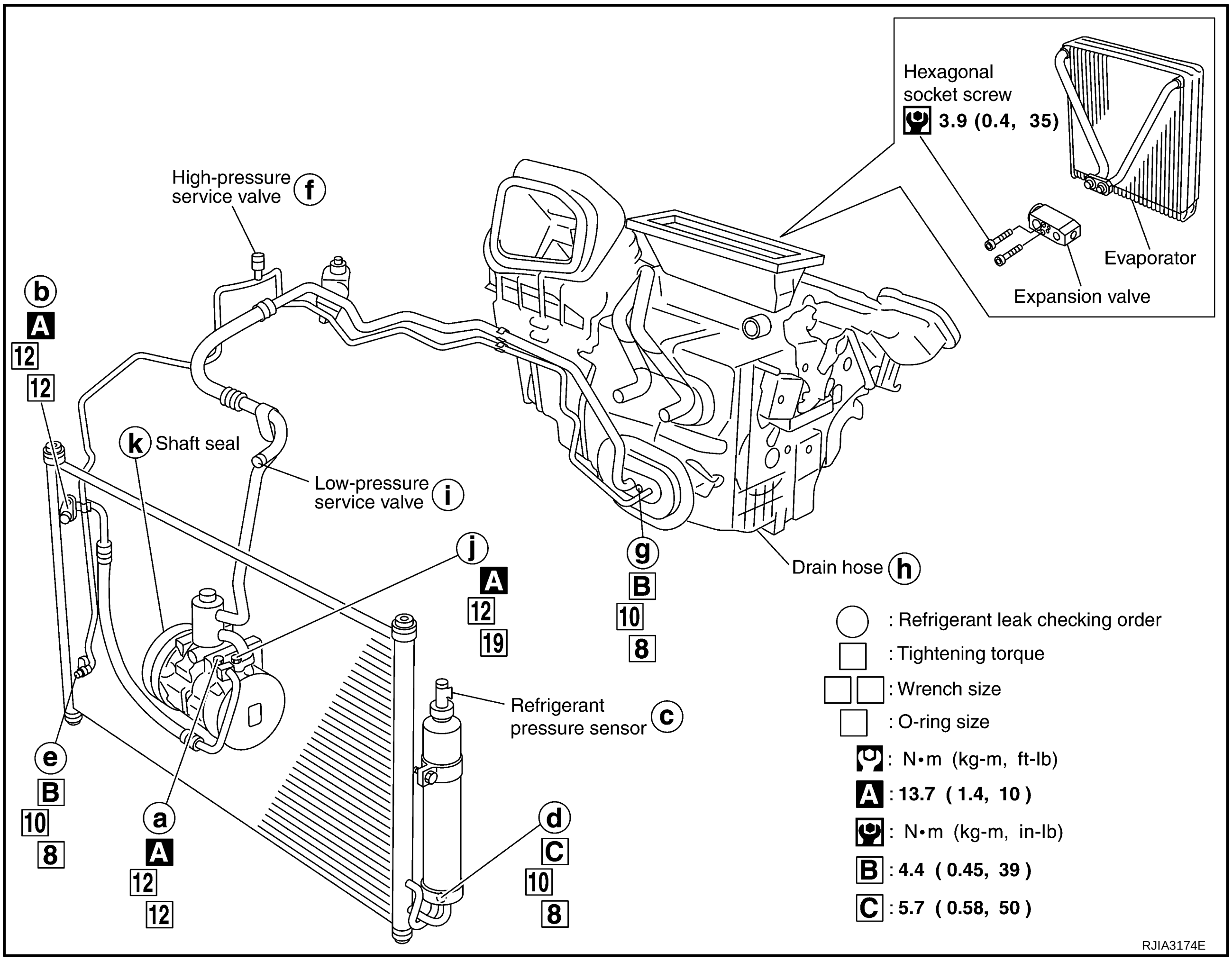

Removal and Installation of Compressor

AJS001LL

REMOVAL

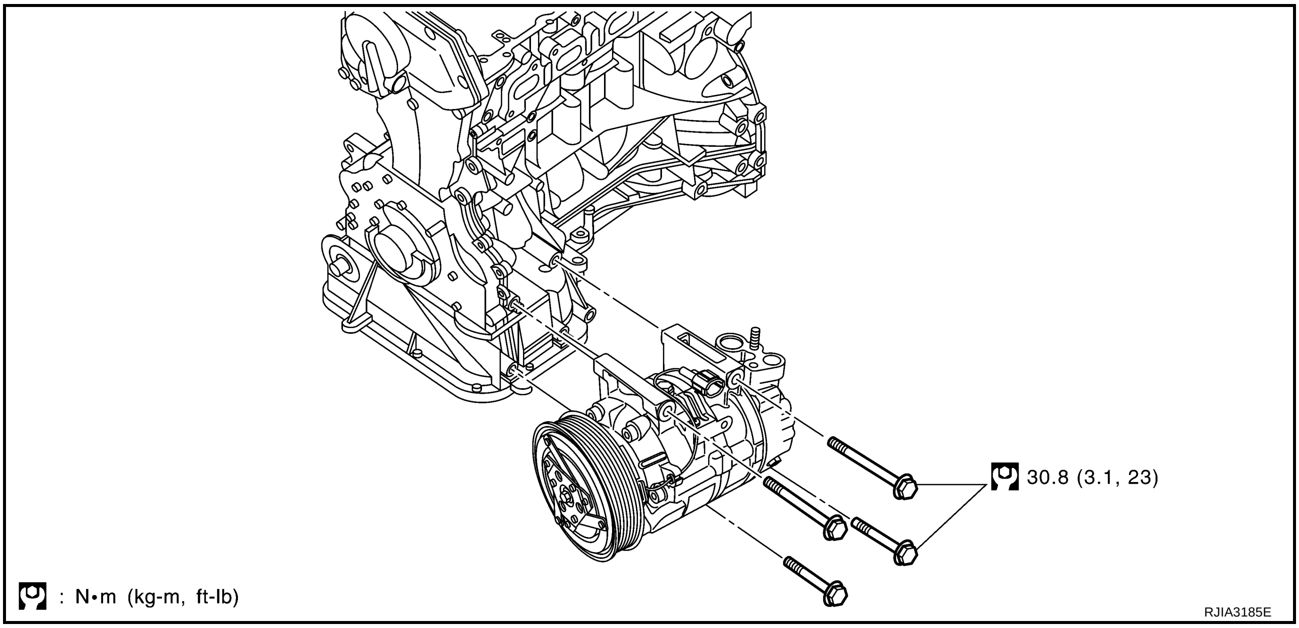

1. Use a refrigerant collecting equipment (for HFC-134a) to discharge the refrigerant.
2. Remove engine undercover, using power tools.

3. Remove compressor-alternator belt. Refer to EM-11, "Removal and Installation" or EM-12, "Removal and Installation of Drive Belt Auto-Tensioner" .
4. Remove mounting bolt from high-pressure flexible hose.
5. Remove mounting nut from low-pressure flexible hose.

   CAUTION:

   Cap or wrap the joint of the pipe with suitable material such as vinyl tape to avoid the entry of air.

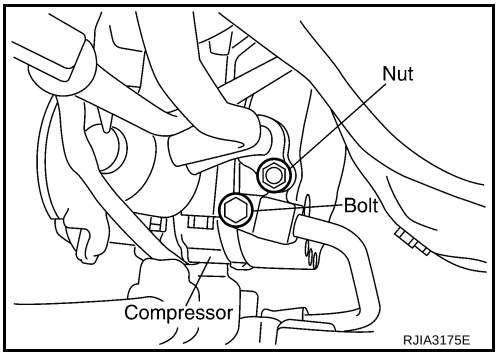

6. Disconnect compressor connector.
7. Remove mounting bolts from compressor.
8. Remove compressor from the lower side of the vehicle.

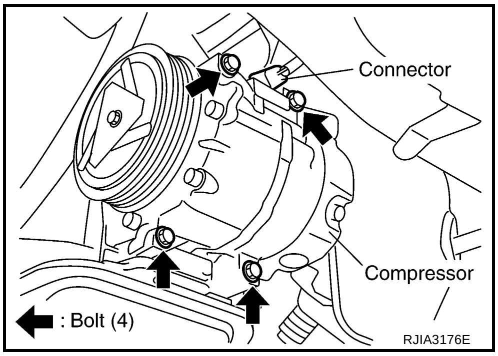

INSTALLATION

Installation is basically the reverse order of removal.

CAUTION:

- **Replace O-rings of low-pressure flexible hose and high-pressure flexible hose with new ones, and then apply compressor oil to it when installing it.**
- **When recharging refrigerant, check for leaks.**

Removal and Installation of Compressor Clutch

AJS001OK

REMOVAL

Overhaul

1. When removing center bolt, hold clutch disc with clutch disc wrench (SST).

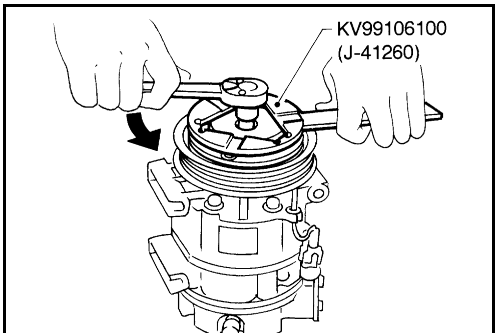

RHA136EB

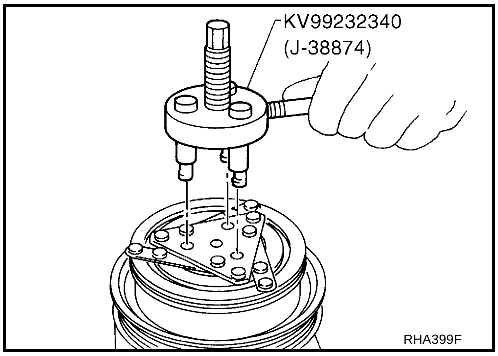

RHA399F

2. Remove clutch disc using clutch disc puller (SST).

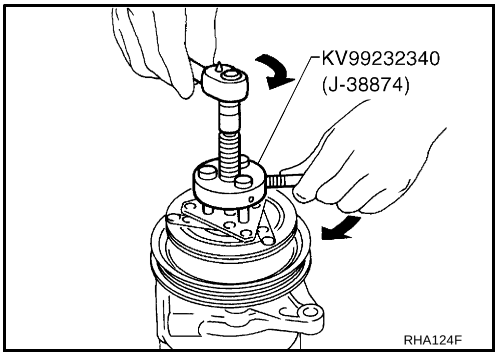

RHA124F

3. Remove snap ring using external snap ring pliers.

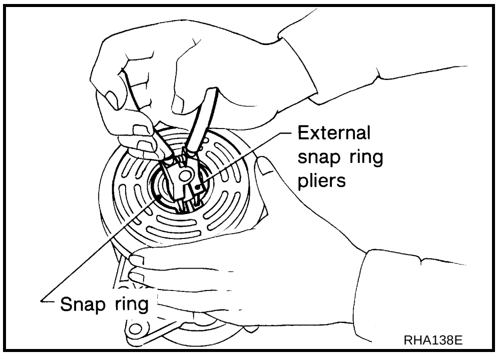

RHA138E

4. Position the center pulley puller on the end of the drive shaft, and remove pulley assembly using any commercially available pulley puller.
   To prevent the pulley groove from being deformed, the puller claws should be positioned into the edge of the pulley assembly.

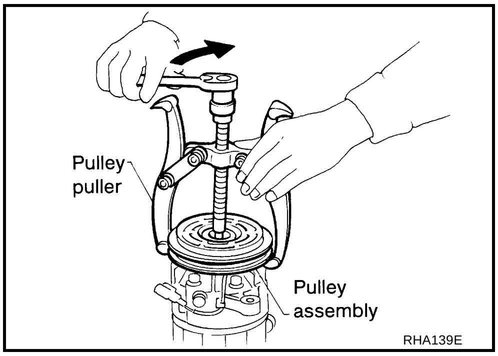

5. Remove field coil harness clip using a pair of pliers.

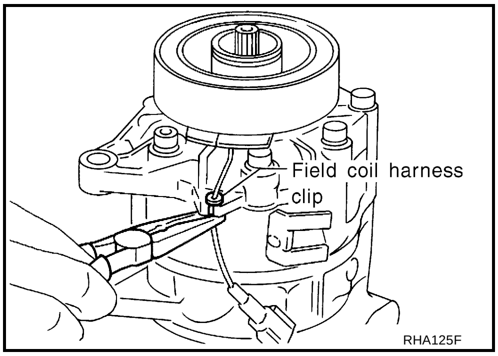

6. Remove snap ring using external snap ring pliers.

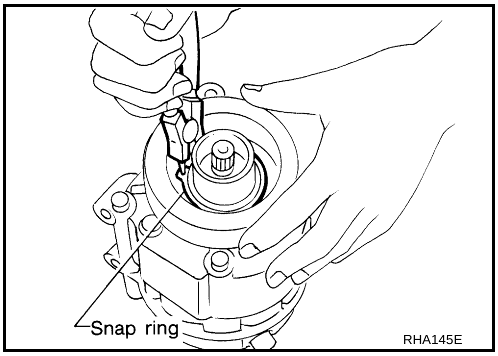

Inspection

Clutch disc
If the contact surface shows signs of damage due to excessive heat, replace clutch disc and pulley.

Pulley
Check the appearance of the pulley assembly. If contact surface of pulley shows signs of excessive grooving, replace clutch disc and pulley. The contact surfaces of the pulley assembly should be cleaned with a suitable solvent before reinstallation.

Coil
Check coil for loose connection or cracked insulation.

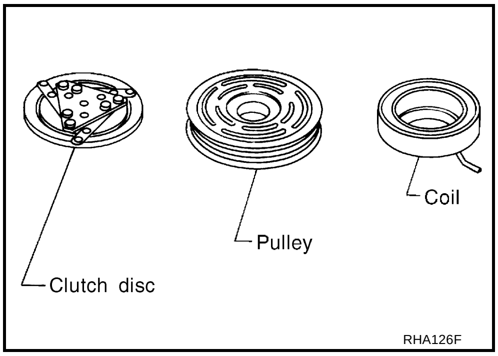

INSTALLATION

1. Install field coil.
   Be sure to align the coil's pin with the hole in the compressor's front head.
2. Install field coil harness clip using a screwdriver.

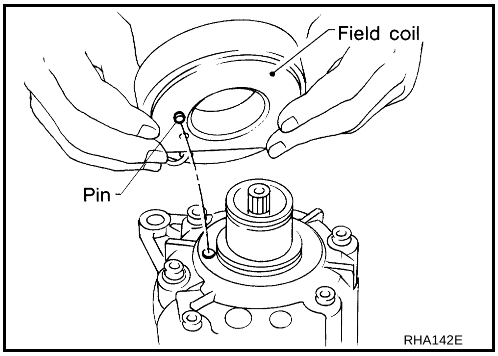

3. Install pulley assembly using pulley installer (SST) and a hand press, and then install snap ring using snap ring pliers.

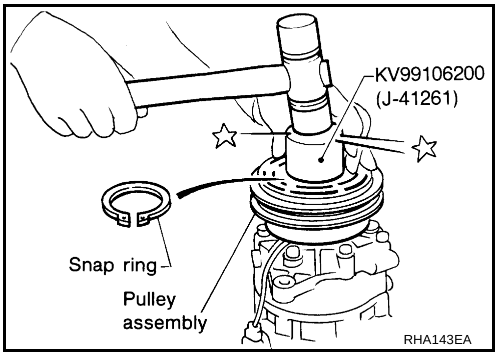

4. Install clutch disc on drive shaft, together with original shim(s). Press clutch disc down by hand.

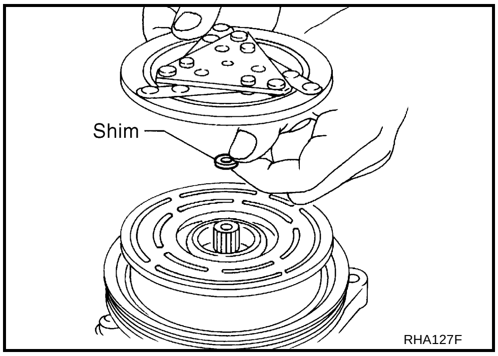

5. Using the holder to prevent clutch disc rotation.

   : 14 N·m (1.4 kg-m, 10 ft-lb)

   After tightening the bolt, check that the pulley rotates smoothly.

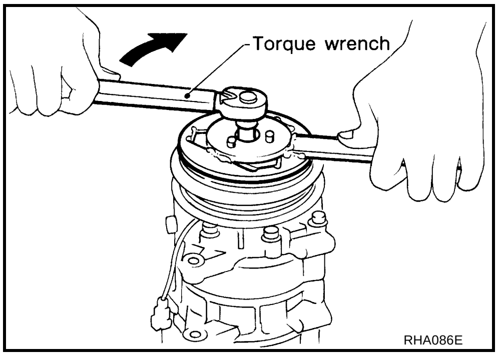

6. Check clearance around the entire periphery of clutch disc.

   Disc to pulley clearance : 0.3 - 0.6 mm (0.012 - 0.024 in)

   If the specified clearance is not obtained, replace adjusting spacer and readjust.

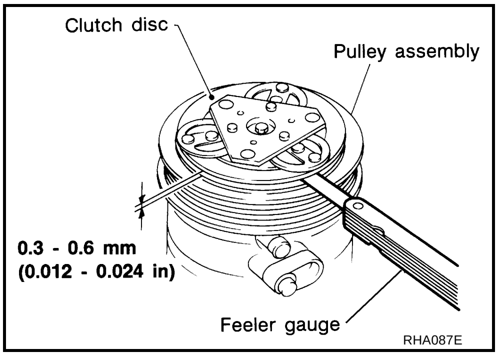

Break-In Operation

When replacing compressor clutch assembly, always carry out the break-in operation. This is done by engaging and disengaging the clutch about thirty-times. Break-in operation raises the level of transmitted torque.

Removal and Installation of Low-Pressure Flexible Hose

AJS001LN

REMOVAL

1. Use a refrigerant collecting equipment (for HFC-134a) to discharge the refrigerant.
2. Remove extension cowl top panel.
3. Remove the clips from low-pressure flexible hose.
4. Remove mounting bolts from low-pressure flexible hose bracket.
5. Remove harness bracket mounting bolt.

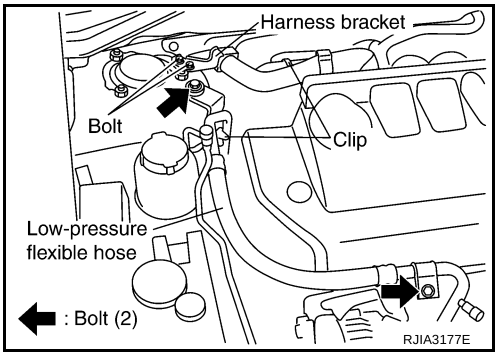

6. Remove mounting nut from low-pressure flexible hose.

   CAUTION:
   Cap or wrap the joint of the pipe with suitable material such as vinyl tape to avoid the entry of air.

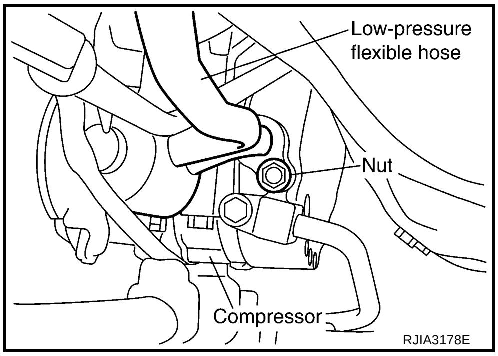

7. Remove mounting bolt, and then remove low-pressure flexible hose.

   CAUTION:
   Cap or wrap the joint of the pipe with suitable material such as vinyl tape to avoid the entry of air.

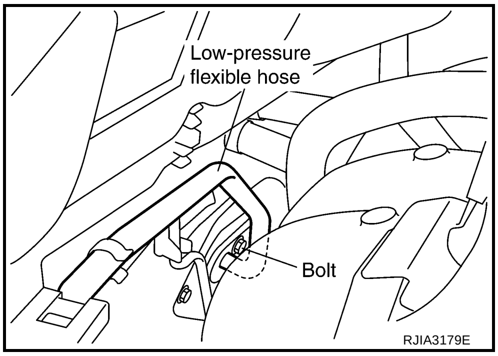

INSTALLATION

Installation is basically the reverse order of removal.

CAUTION:

- **Replace O-rings of low-pressure flexible hose with new ones, and then apply compressor oil to it when installing it.**
- **When recharging refrigerant, check for leaks.**

Removal and Installation of High-Pressure Flexible Hose

AJS001LO

REMOVAL

1. Use a refrigerant collecting equipment (for HFC-134a) to discharge the refrigerant.
2. Remove high-pressure flexible hose mounting clip.

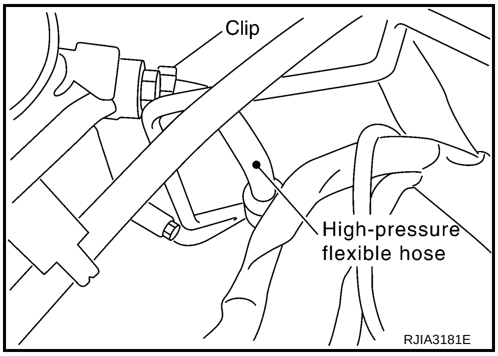

3. Remove mounting bolt from high-pressure flexible hose, and then remove it.

   CAUTION:

   Cap or wrap the joint of the pipe with suitable material such as vinyl tape to avoid the entry of air.

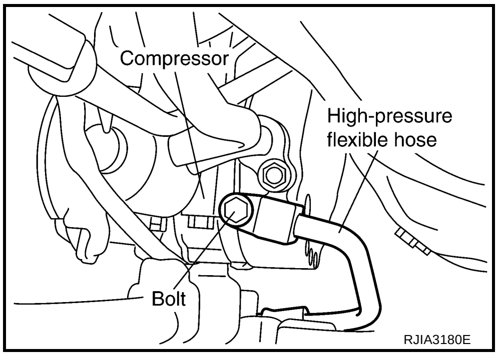

INSTALLATION

Installation is basically the reverse order of removal.

CAUTION:

- **Replace O-rings of high-pressure flexible hose with new ones, and then apply compressor oil to it when installing it.**
- **When recharging refrigerant, check for leaks.**

Removal and Installation of High-Pressure Pipe

AJS001LP

REMOVAL

1. Use a refrigerant collecting equipment (for HFC-134a) to discharge the refrigerant.
2. Remove low-pressure flexible hose. Refer to ATC-126, "Removal and Installation of Low-Pressure Flexible Hose" .
3. Remove high-pressure pipe from clip.

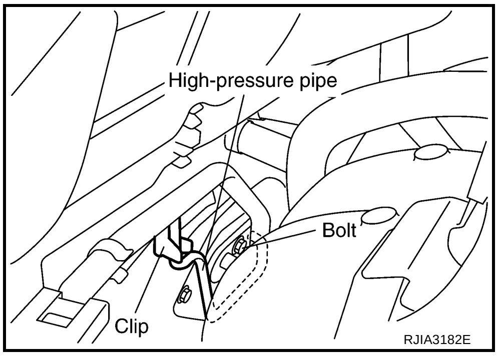

4. Remove mounting bolt from high-pressure pipe.

   CAUTION:

   Cap or wrap the joint of the pipe with suitable material such as vinyl tape to avoid the entry of air.

5. Remove high-pressure pipe.

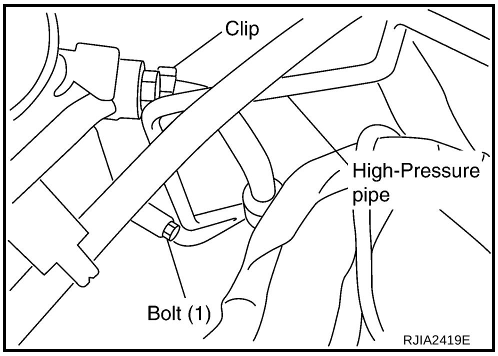

INSTALLATION

Installation is basically the reverse order of removal.

CAUTION:

- **Replace O-rings of high-pressure pipe with new ones, and then apply compressor oil to it when installing it.**
- **When recharging refrigerant, check for leaks.**

Removal and Installation of Condenser

AJS001LQ

REMOVAL

1. Use a refrigerant collecting equipment (for HFC-134a) to discharge the refrigerant.
2. Disconnect high-pressure flexible hose and high-pressure pipe from the condenser.

   CAUTION:

   Cap or wrap the joint of the pipe with suitable material such as vinyl tape to avoid the entry of air.

3. Remove air duct (inlet). Refer to EM-14, "AIR CLEANER AND AIR DUCT" .
4. Remove battery and battery tray. Refer to SC-4, "BATTERY" .

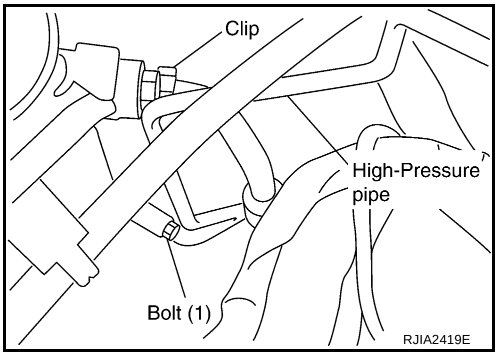

5. Disconnect refrigerant pressure sensor connector.

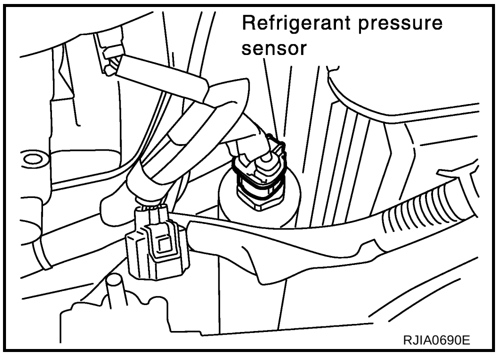

6. Remove front grille and radiator mounting bracket. Refer to EI-18, "FRONT GRILLE" and CO-11, "RADIATOR" .
7. Remove mounting nuts from condenser.
8. Remove radiator from lower mount, move it to engine side, and then remove condenser between radiator and radiator core support.

   CAUTION:

   Be careful not to damage the core surface of condenser and radiator.

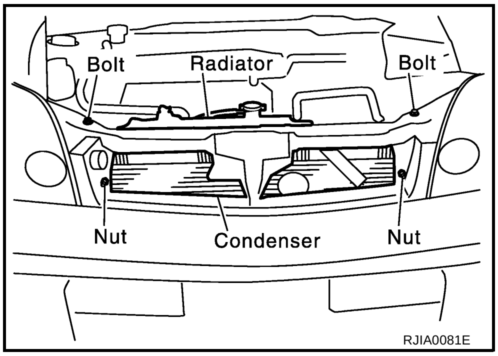

INSTALLATION

Installation is basically the reverse order of removal.

CAUTION:

- **Replace O-rings of high-pressure pipe and high-pressure flexible hose with new ones, and then apply compressor oil to them after installing them.**
- **When recharging refrigerant, check for leaks.**

Condenser mounting nuts

: 4.2 N·m (0.43 kg-m, 37 in-lb)

Removal and Installation of Liquid Tank

AJS001LR

REMOVAL

1. Remove condenser. Refer to ATC-128, "Removal and Installation of Condenser" .
2. Clean liquid tank and its surrounding area, and remove dirt and rust from liquid tank.
   CAUTION:
   Be sure to clean carefully.
3. Remove mounting bolts from liquid tank.
   CAUTION:
   Cap or wrap the joint of condenser pipe with a suitable material such as a vinyl tape to avoid the entry of air.

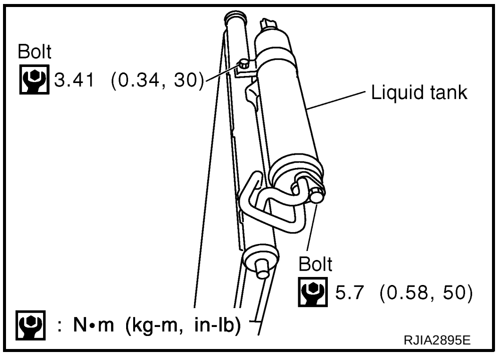

4. Lift liquid tank bracket upward. Remove bracket from protruding part of condenser.
5. Slide liquid tank upward, and then remove liquid tank.

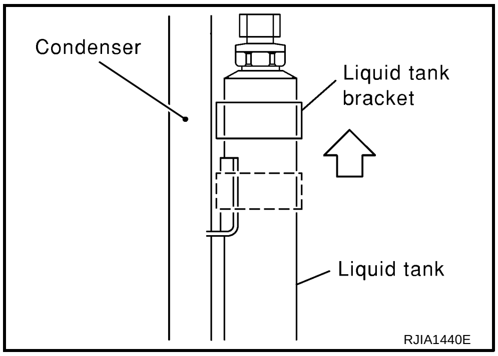

INSTALLATION

Install liquid tank, and then install liquid tank bracket on condenser.

CAUTION:

- **Make sure liquid tank bracket is securely installed at protrusion of condenser. (Make sure liquid tank bracket does not move to a position below center of liquid tank.)**
- **Replace O-rings of the condenser pipe with new ones, and then apply compressor oil to them after installing them.**
- **When recharging refrigerant, check for leaks.**

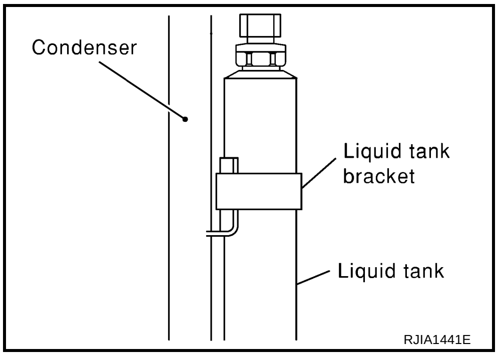

Removal and Installation of Refrigerant Pressure Sensor

AJS001LS

REMOVAL

1. Use a refrigerant collecting equipment (for HFC-134a) to discharge the refrigerant.
2. Remove liquid tank. Refer to ATC-129, "Removal and Installation of Liquid Tank" .
3. Using a vise, secure liquid tank, and remove refrigerant pressure sensor.

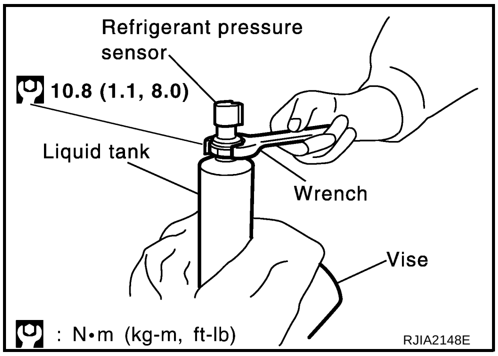

INSTALLATION

Installation is basically the reverse order of removal.

CAUTION:

- **Apply compressor oil to O-ring of refrigerant pressure sensor when installing it.**
- **When recharging refrigerant, check for leaks.**

Removal and Installation of Evaporator

AJS001LU

REMOVAL

1. Use a refrigerant collecting equipment (for HFC-134a) to discharge the refrigerant.
2. Remove extension cowl top panel.
3. Disconnect low-pressure flexible hose and high-pressure pipe from evaporator.

   CAUTION:
   Cap or wrap the joint of low-pressure flexible hose and high-pressure pipe with a suitable material such as a vinyl tape to avoid the entry of air.

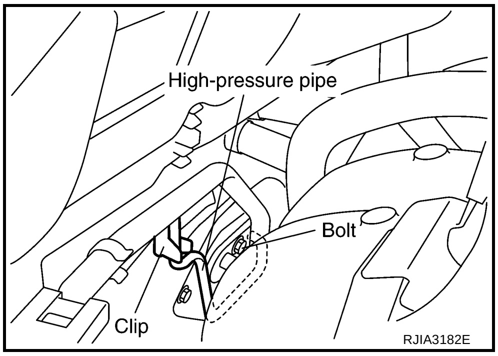

4. Remove mounting screw, and then remove expansion valve cover.
5. Remove mounting bolts, and then remove expansion valve.
6. Remove blower unit. Refer to ATC-103, "BLOWER UNIT" .

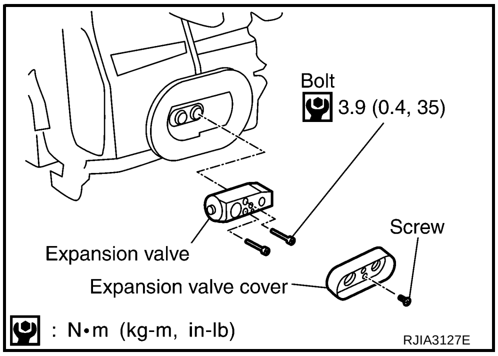

7. Remove foot duct (passenger side).
8. Remove mounting screws, and then remove evaporator cover.
9. Slide evaporator, and then remove it from heater & cooling unit assembly.

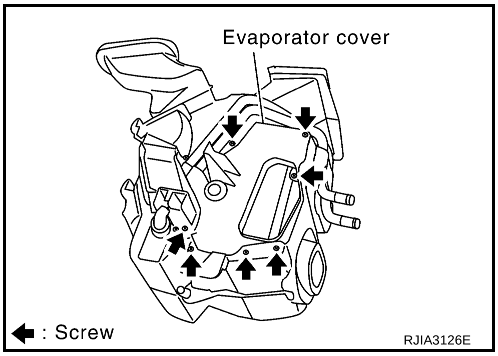

10. Remove intake sensor from evaporator, and then remove evaporator.

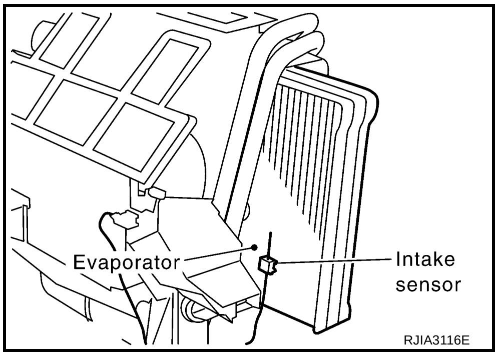

INSTALLATION

Installation is basically the reverse order of removal.

CAUTION:

- **Replace O-rings of low-pressure flexible hose and high-pressure pipe with new ones, and then apply compressor oil to them when installing them.**
- **Mark the mounting position of intake sensor bracket.**
- **When recharging refrigerant, check for leaks.**

Removal and Installation of Expansion Valve

AJS001LV

REMOVAL

1. Use a refrigerant collecting equipment (for HFC-134a) to discharge the refrigerant.
2. Remove extension cowl top panel.
3. Disconnect low-pressure flexible hose and high-pressure pipe from evaporator.

   CAUTION:

   Cap or wrap the joint of low-pressure flexible hose and high-pressure pipe with a suitable material such as a vinyl tape to avoid the entry of air.
4. Remove mounting screw, and then remove expansion valve cover.
5. Remove mounting bolts, and then remove expansion valve.

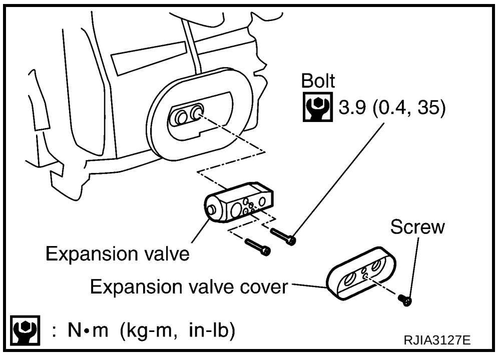

INSTALLATION

Installation is basically the reverse order of removal.

CAUTION:

- **Replace O-rings of expansion valve and piping with new ones, and then apply compressor oil to them when installing them.**
- **When recharging refrigerant, check for leaks.**

Checking for Refrigerant Leaks

AJS001LW

Perform a visual inspection of all refrigeration parts, fittings, hoses and components for signs of A/C lubricant leakage, damage and corrosion. A/C lubricant leakage may indicate an area of refrigerant leakage. Allow extra inspection time in these areas when using either an electronic refrigerant leak detector or fluorescent dye leak detector (SST: J-42220).

If dye is observed, confirm the leak with an electronic refrigerant leak detector. It is possible a prior leak was repaired and not properly cleaned.

When searching for leaks, do not stop when one leak is found but continue to check for additional leaks at all system components and connections.

When searching for refrigerant leaks using an electronic leak detector, move the probe along the suspected leak area at 1 to 2 inches per second and no further than 1/4 inch from the component.

CAUTION:

Moving the electronic leak detector probe slower and closer to the suspected leak area will improve the chances of finding a leak.

Checking System for Leaks Using the Fluorescent Leak Detector

AJS001LX

1. Check A/C system for leaks using the UV lamp and safety goggles (SST: J-42220) in a low sunlight area (area without windows preferable). Illuminate all components, fittings and lines. The dye will appear as a bright green/yellow area at the point of leakage. Fluorescent dye observed at the evaporator drain opening indicates an evaporator core assembly (tubes, core or expansion valve) leak.
2. If the suspected area is difficult to see, use an adjustable mirror or wipe the area with a clean shop rag or cloth, with the UV lamp for dye residue.
3. After the leak is repaired, remove any residual dye using dye cleaner (SST: J-43872) to prevent future misdiagnosis.
4. Perform a system performance check and verify the leak repair with an approved electronic refrigerant leak detector.

   NOTE:

   Other gases in the work area or substances on the A/C components, for example, anti-freeze, windshield washer fluid, solvents and lubricants, may falsely trigger the leak detector. Make sure the surfaces to be checked are clean.

   Clean with a dry cloth or blow off with shop air.

   Do not allow the sensor tip of the detector to contact with any substance. This can also cause false readings and may damage the detector.

Dye Injection

AJS001LY

(This procedure is only necessary when recharging the system or when the compressor has seized and was replaced.)

1. Check A/C system static (at rest) pressure. Pressure must be at least 345 kPa (3.52 kg/cm^2 , 50 psi).
2. Pour one bottle (1/4 ounce / 7.4 cc) of the A/C refrigerant dye into the injector tool (SST: J-41459).
3. Connect the injector tool to the A/C Low-pressure side service fitting.
4. Start engine and switch A/C ON.
5. When the A/C operating (compressor running), inject one bottle (1/4 ounce / 7.4 cc) of fluorescent dye through the low-pressure service valve using dye injector tool (SST: J-41459) (refer to the manufacture’s operating instructions).
6. With the engine still running, disconnect the injector tool from the service fitting.

   CAUTION:

   Be careful the A/C system or replacing a component, pour the dye directly into the open system connection and proceed with the service procedures.
7. Operate the A/C system for a minimum of 20 minutes to mix the dye with the system oil. Depending on the leak size, operating conditions and location of the leak, it may take from minutes to days for the dye to penetrate a leak and become visible.

Electronic Refrigerant Leak Detector

AJS001LZ

PRECAUTIONS FOR HANDLING LEAK DETECTOR

When performing a refrigerant leak check, use an A/C electrical leak detector (SST: J-41995) or equivalent. Ensure that the instrument is calibrated and set properly per the operating instructions.
The leak detector is a delicate device. In order to use the leak detector properly, read the operating instructions and perform any specified maintenance.

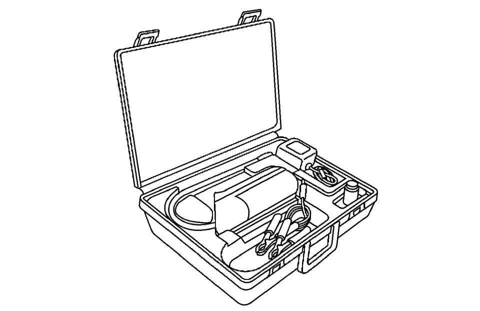

J-41995 (A/C leak detector)

SHA196FA

1. Position probe approximately 5 mm (3/16 in) away from point to be checked.

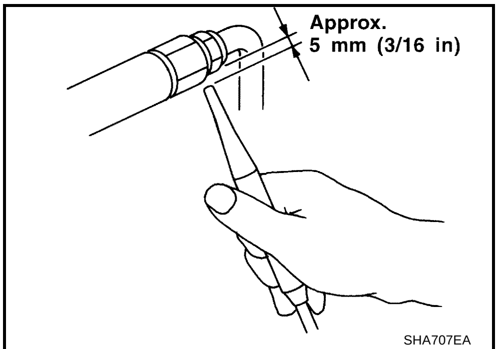

SHA707EA

2. When testing, circle each fitting completely with probe.

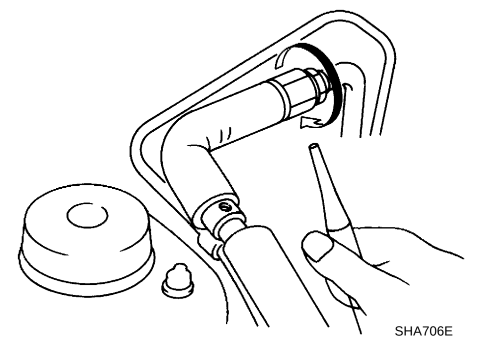

SHA706E

3. Move probe along component approximately 25 to 50 mm (1 to 2 in)/sec.

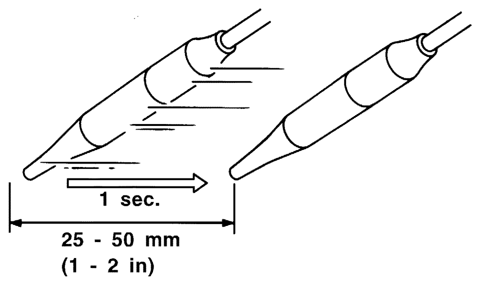

SHA708EA

CHECKING PROCEDURE

To prevent inaccurate or false readings, make sure there is no refrigerant vapor, shop chemicals, or cigarette smoke in the vicinity of the vehicle. Perform the leak test in calm area (low air/wind movement) so that the leaking refrigerant is not dispersed.

1. Stop engine.
2. Connect a suitable A/C manifold gauge set (SST: J-39183) to the A/C service valves.
3. Check if the A/C refrigerant pressure is at least 345 kPa (3.52 kg/cm^2 , 50 psi) above 16°C (61°F). If less than specification, recover/evacuate and recharge the system with the specified amount of refrigerant.

   NOTE:
   At temperatures below 16°C (61°F), leaks may not be detected since the system may not reach 345 kPa (3.52 kg/cm^2 , 50 psi).
4. Perform the leak test from the high-pressure side (compressor discharge a to evaporator inlet g) to the low-pressure side (evaporator drain hose h to shaft seal k). Refer to ATC-121, "Components" . Perform a leak check for the following areas carefully. Clean the component to be checked and move the leak detected probe completely around the connection/component.
   Compressor
   Check the fitting of high- and low-pressure hoses, relief valve and shaft seal.
   Condenser
   Check the fitting of high-pressure hose and pipe.
   Liquid tank
   Check the refrigerant pressure sensor.
   Service valves
   Check all around the service valves. Ensure service valve caps are secured on the service valves (to prevent leaks).

   NOTE:
   After removing A/C manifold gauge set from service valves, wipe any residue from valves to prevent any false readings by leak detector.
   Cooling unit (Evaporator)
   With engine OFF, turn blower fan on “High” for at least 15 seconds to dissipate any refrigerant trace in the cooling unit. Wait a minimum of 10 minutes accumulation time (refer to the manufacturer’s recommended procedure for actual wait time) before inserting the leak detector probe into the drain hose.
   Keep the probe inserted for at least 10 seconds. Use caution not to contaminate the probe tip with water or dirt that may be in the drain hose.
5. If a leak detector detects a leak, verify at least once by blowing compressed air into area of suspected leak, then repeat check as outlined above.
6. Do not stop when one leak is found. Continue to check for additional leaks at all system components.
   If no leaks are found, perform steps 7 - 10.
7. Start engine.
8. Set the heater A/C control as follows;

a. A/C switch: ON
b. Mode control dial: VENT (Ventilation)
c. Intake door position: Recirculation
d. Temperature control dial: Max. cool
e. Fan speed: High

9. Run engine at 1,500 rpm for at least 2 minutes.
10. Stop engine and perform leak check again following steps 4 through 6 above.

Refrigerant leaks should be checked immediately after stopping the engine. Begin with the leak detector at the compressor. The pressure on the high-pressure side will gradually drop after refrigerant circulation stops and pressure on the low-pressure side will gradually rise, as shown in the graph. Some leaks are more easily detected when pressure is high.

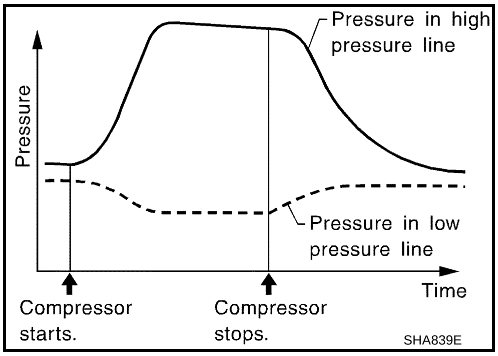

11. Before connecting recovery/recycling recharging equipment to vehicle, check recovery/recycling recharging equipment gauges. No refrigerant pressure should be displayed. If pressure is displayed, recover refrigerant from equipment lines and then check refrigerant purity.
12. Confirm refrigerant purity in supply tank using recovery/recycling recharging equipment and refrigerant identifier.
13. Confirm refrigerant purity in vehicle A/C system using recovery/recycling recharging equipment and refrigerant identifier.
14. Discharge A/C system using approved refrigerant recovery/recycling recharging equipment. Repair the leaking fitting or component if necessary.
15. Evacuate and recharge A/C system and perform the leak test to confirm no refrigerant leaks.
16. Conduct A/C performance test to ensure system works properly.

SERVICE DATA AND SPECIFICATIONS (SDS)

PFP:00030

Compressor

AJS001M0

Model		Calsonic Kansei make CWV-615M
Type		V-6 variable displacement
Displacement cm^3 (cu in)/rev	Max.	146 (8.91)
	Min.	13.5 (0.824)
Cylinder bore × stroke mm (in)		35.2 (1.386) × [2.3 - 25.0 (0.091 - 0.984)]
Direction of rotation		Clockwise (viewed from drive end)
Drive belt		Poly V

Lubricant

AJS001M1

Model		Calsonic Kansei make CWV-615M
Name		Nissan A/C System Oil Type S (DH-PS)
Part number		KLH00-PAGS0
Capacity mℓ (Imp fl oz)	Total in system	180 (6.3)
	Compressor (Service part) charging amount	180 (6.3)

Refrigerant

AJS001M2

Type	HFC-134a (R-134a)
Capacity kg (lb)	0.55 (1.21)

Engine Idling Speed

AJS001M3

Refer to EC-75, "Idle Speed and Ignition Timing Check" .

Belt Tension

AJS001M4

Refer to EM-11, "DRIVE BELTS" .